22017
CONSTRUCTION DWGS
2025-04-28

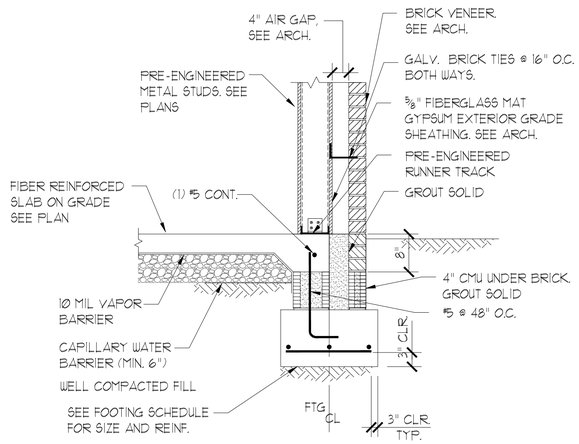

TYPICAL WALL FOOTING DETAIL (1)

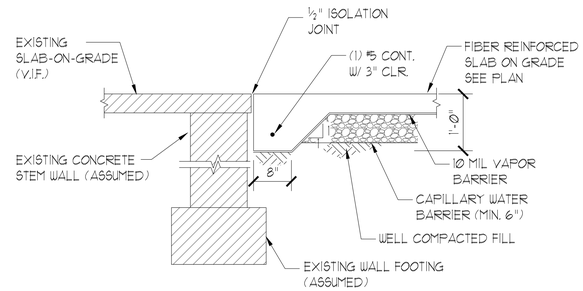

SLAB EDGE DETAIL AT EXISTING (2)

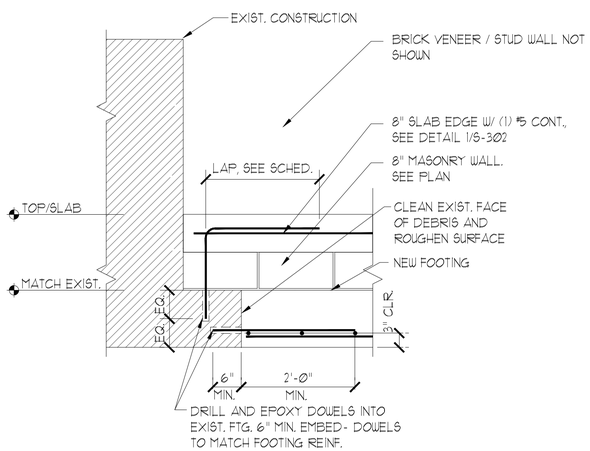

NEW/EXISTING FOUNDATION (4)

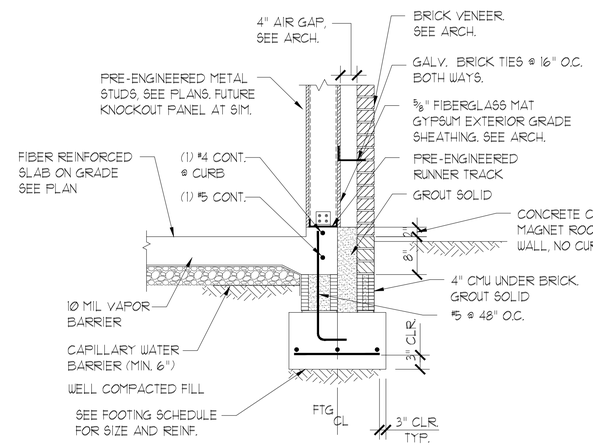

WALL FOOTING DETAIL W/ CURB (5)

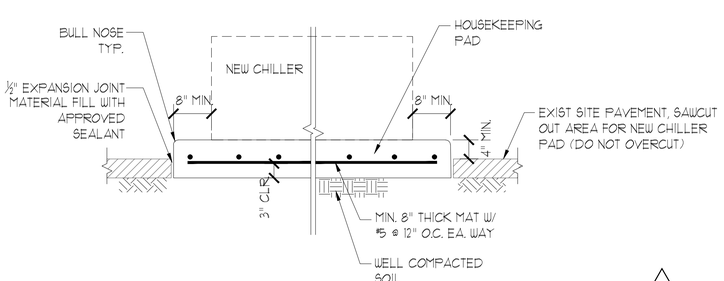

CHILLER HOUSEKEEPING PAD (6)

1

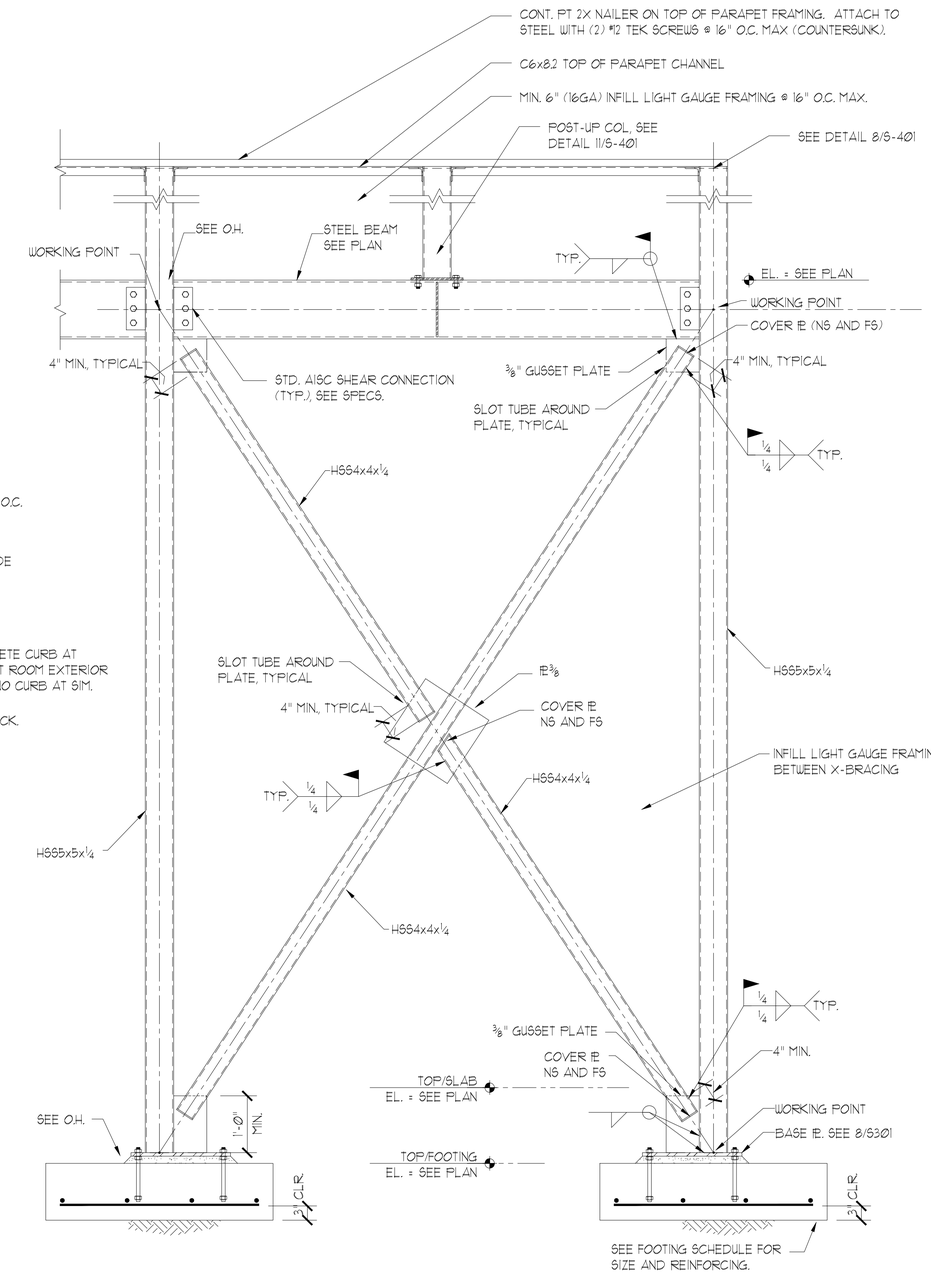

X-BRACING DETAIL (3)

Pennoni
1705 SOUTH GADSDEN STREET, SUITE 100
Tallahassee, FL. 32301
(850) 536-8140
Florida Coa 7819
Justin W. Duncan, P.E., FRSE
Florida P.E. 78524
Pennoni Project No. DAGAT24007

DAG ARCHITECTS
DAG Architects AR0009694
455 Harrison Ave Suite 1 Panama City, FL 32401
850.387.1671
www.DAGarchitects.com

BID DOCUMENTS

HCA FLORIDA GULF COAST HOSPITAL
Outpatient Rehabilitation & Diagnostic Center
DIAGNOSTICS MRI ADDITION
2024 STATE STREET, PANAMA CITY, FL 32405

HCA Florida Gulf Coast Hospital

REVISIONS:

No.	Description	Date
1	REVISION #1	4/25/25

FOUNDATION DETAILS

PROJECT NUMBER	24107
DATED	03/28/2025

S-302

DAG ARCHITECTS
Atlanta
Destin
Melbourne
Panama City
Pensacola
Tallahassee

Addendum

455 Harrison Avenue
Suite I
Panama City, Florida 32401
850.387.1671
AR0009694

HCA Diagnostic Center MRI Addition Bid Addendum No. 1
Date: 04/25/25
Project: HCA Diagnostic Center MRI Addition
DAG Project #: 24107

1 General

1.1 The following changes and/or additions to the plans and specifications are hereby made part of same and are incorporated in full as part of the pricing set and future Contract documents.

2 Responses to proposers' questions

2.1 Q: A-101- It appears as if there is a curb or wall being referenced around the new chiller. If required, please provide detail.
A: A new curb detail for the chiller has been added to the Structural drawings.

Q: S-302- Architectural drawings reference a 1" expansion/isolation joint. Detail 2/S-302 reference a 1/2" expansion/isolation joint. Please confirm a 1" expansion/isolation joint is correct.
A: The slab-on-grade does not require a 1" expansion joint, only a 1/2" isolation joint. The framing above the slab requires a 1" expansion joint as noted on the plans and details.

Q: A-311- The floor flatness spec is reference on S-001 Cast-in-place concrete note 32 and US-2 General Note 2. Please confirm floor flatness is to be US-2 General Note 2.
A: The correct floor-level requirement as stated by GE Health Care is outlined below:

4. Magnet, Enclosure, and Patient Table areas must be flat and level within 3 mm (0.125 in.), with the magnet in place, within the shaded area shown in Figure 3-10 Magnet Room Floor Levelness Area on page 71.

5670001 Revision 18 SIGNA™ Artist 1.5T **70/145**

(Platform Configuration) 3.5 Finished Room Requirements

Figure 3-10 Magnet Room Floor Levelness Area

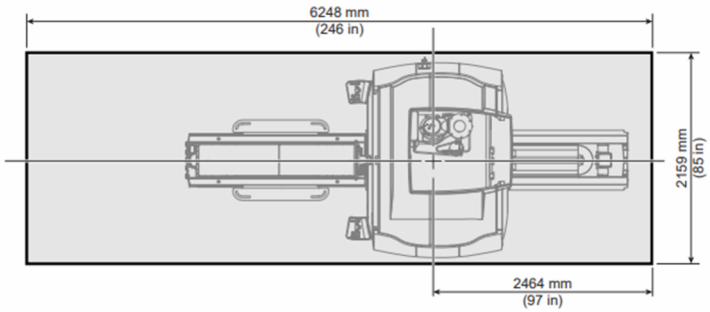

Q: S-302- Please confirm 4/S-302 is referenced to the correct location. If an 8" slab (or turndown) is required at this location, please confirm if an isolation joint is required.
A: Detail 4/S-302 is cut in the correct location. It's cut looking at the outside slab edge transverse to the existing building showing how the new footing ties into the existing footing. There should be a 1/2" isolation joint where the 8" turndown abuts the existing slab similar to 2/S-302.

Q: S-302- Perimeter turn down detail is referenced on 1/S-302 and turndown detail at MRI slab is reference at 5/S-302. Please provide detail showing where these two details meet.
A: The bottom of the turndown at the MRI will be 2" lower to account for the 2" curb so we would recommend cutting the stem wall block down 2" to account for this condition. The #5 bar will remain continuous through both details.

Q: A-111- Finish Schedule on A3/A-111 references sealed concrete, please provide specified product for this sealer.
A: Basis of Design: Prosoco Consolideck LS sealer

Q: A-101- As it relates to new and existing handrails, please clarify the following:
1. Is a handrail required at new ramp outside of the mechanical room?
2. Existing handrail to be reinstalled, please provide anchor details as existing anchors will not be able to be salvaged.
3. Per detail A2/A-111, the handrail shown does not match the existing handrail profile, please clarify if a new handrail is required.

A:
1. Yes- please refer to revised elevation A1/A-201
2. Existing handrail to be replaced with new handrail- please refer to sheet A-201 for information.
3. Please refer to response to question #2.

Q: A-111- In rooms where the ceiling is open to structure, please confirm if ceilings are to be painted.
A: The open ceilings will not be painted.

Q: A-101- Please clarify the following:
1. Sheet A3/A-101 references millwork in the control room, however no millwork details are provided. Please confirm that millwork is Owner furnished and installed?
2. Please confirm if any in-wall supports are required.

A: 1. Millwork is contractor provided; please refer to the new millwork countertop sections added to sheet A-301.

Q: A-521- What is the status of the existing roof warranty and specified manufacturer?
A: The existing roof is Siplast Veral Aluminum and was installed in 2022.

Q: General- Is flashing required at new masonry walls above door entries at existing canopy?
A: Vapor barrier flashing was indicated, but new .040 Kynar coated rain drip flashing has been added to the head detail.

Q: US-2- General Note 15, calls for waterproofing at the recessed slab. Please clarify if this is required and if so, provide product specs.
A: Vapor barrier flashing was indicated, but new .040 Kynar coated rain drip flashing has been added to the head detail.

Q: AD-101- Existing door to be removed and replaced per Demo note 6/AD101. Is a lintel required at this opening before removal?
A: As it is just the frame and door being removed and replaced with like, a new lintel isn't required.

Q: A-111- Please provide specification of existing floor to match new vestibule per A3/A-111.
A: Basis of Design: Interface LVT to match existing; adhered per manufacturer's recommendations.

Q: A-111- Finish drawings on A3/A-111 reference ceiling tile to be Armstrong, however it does not include further specifications. Please provide specifications on what product is to be used.
A: Basis of Design: Armstrong 2'x2' Optima Health 1" thick square tegular on 3070 "Clean Room" 15/16" Aluminum Tee grid and wall angle molding.

Q: G-003- Current drawings do not specify any fire/smoke ratings per G-003 Wall Types. Please confirm no wall types require fire/smoke rating provisions.
A: At this time, there are no smoke/ fire ratings required.

Q: S-003- Detail 9/S-501 reference cold form splicing details, however note 21 on S-003 says no splicing permitted. Please clarify if splicing of cold form framing is permitted.
A: Detail 9/S-501 is for a runner track splice which sits on the slab. Note 21 is intended for splicing of light gauge framing such as vertical studs, headers, joists, etc.

Q: A-601- Are there any specifications on the doors/frames/hardware?
A: Interior door Basis of Design is Masonite Cendura Mohawk particle board core NR- paint grade finish with Curries/Assa Abloy KD HM frames- painted to match existing.

Exterior door Basis of Design is Curies/Assa Abloy flush Hurricane Resistant insulated A60 galvannealed steel face with Curies/Assa Abloy "M" series 14 ga. welded galvannealed frames- painted to match existing.

Q: GE-C1- Our understanding is that Universal Shield is to be included in Contractor's bid, and the GE equipment will be furnished by Owner.
A: Correct.

Q: GE-A2- Per discussions with GE Vendor: Is there an injector plan, and will this be furnished and installed by the Owner?
A: Bayer provides and installs the Injector system as Owner furnished/Installed.

Q: GE-A2- Is label 'A' on GE-A2 GE Supplied and GE Installed? If not, who installs?
A: yes- GE Supplied & Installed

Q: General- Per sheet GE-C2 vibration engineering and testing is to be provided by the customer. Please confirm who is responsible for this scope of work.
A: yes- Unless it is provided explicitly by GEHC, the contractor is to assume the cost for the required services.

Q: US-2- Fire rated walls not shown, but US-2 Fire rating gives guidelines, please clarify if current wall types support this requirement.
A: At this time, there are no smoke/ fire ratings required; guidelines are shown in case they are required eventually.

Q: P-001- Please confirm the Cryocooler compressor on the equipment schedule on P-001 is the same as the integrated cooling cabinet referenced on GE-A2. (Item #7)
A: The cryocooler compressor is part of the ICC, correct. Final equipment supplied and installed by GEHC to be verified prior to installation.

Q: M-101- Are refrigerant lines to HP-1 to be under or above ground? Please provide detail/product specification.
A: The intent is for the refrigerant to be above ground. Refer to detail 1/M-203

Q: M-202- Detail 1/M-202, Please confirm if this applies to the chiller, MHP-1 and MHP-2, and HP-1. If this detail only applies to the chiller, please provide pad details for other exterior equipment.
A: This detail applies to all outdoor mechanical equipment.

Q: M-203- Per detail2/M-203 please confirm this is a new roof curb and to be provided by Contractor.
A: This is a new roof curb provided by and installed by the contractor. Flash and install per manufacturer's recommendations.

Q: E-701- Please confirm building ground loop requirements. Is the new ground loop required to tie into existing ground loop or to be separate?
A: Refer to sheet E-601 for grounding information.

Q: E-701- Please confirm if an extension to the existing lightning protection is required.
A: Yes- refer to sheets E002, E-101, E-115 and E-505 for information.

Q: E-701- Per Keynote 4 and 5 on E-201 the installation of ICC and PGR are to be installed by GEHC. Per Keynote 2 on E-701 the installation of ICC and PGR are to be installed by the electrical Contractor. Please confirm who is installing this equipment.
A: Refer to sheet E-601 for updated installation requirements.

Q: A-531- Is there a location to store salvaged items to be reused?
A: There was one main laydown area and a secondary "temporary" area adjacent to the jobsite indicated at the on-site Pre-Bid meeting; final location to be coordinated with Owner's representative.

Q: E-201- Per note 6 on E-201, no power required to CIP. Please confirm who connects interconnect wiring between the CIP and chiller.
A: Please refer to GE Health Care documents for connection Information.

Q: General- Please provide any as-builts of underground utilities in this area.
A: Existing conditions, underground utilities and topo lines have been added to the new Architectural Site Plan.

Q: G-001- Provide Civil Drawings and limits of new pavement.
A: Civil drawings were not prepared for this project- refer to the new Architectural Site Plan. There is no new pavement work other than patch/repair damaged areas from construction.

Q: General- Site striping/fencing/barriers to protect proximity requirements outside?
A: Critical Gauss lines are all within the footprint of the building.

Q: AD-101- Is there any landscape work?
A: Other than curb and river rock @ building perimeter, not at this moment.

Q: General- Where are existing utilities in footprint of building?
A: Refer to the new Architectural Site Plan for existing conditions available.

Q: General- Building Signage (interior/exterior) not referenced on the drawings. Please confirm if this is provided by the Owner.
A: Room/door signage to be included in the bid- coordinate with Owner's representative.

Q: A-121- Section cuts A2/A-301and A4/A-312 are referenced but not included in the drawing package. Please provide these details.
A: Detail callouts have been corrected.

Q: Is there a hardware specification? If not, what hardware types/brands/finishes are being requested?
A: All door hardware to be Schlage Large Format Interchangeable Core (LFIC). Refer to revisions to Door Schedule, sheet A-601, for additional information.

Q: What type of roofing is being used (TPO, PVC or EPDM)? What is the thickness 45 mil, 60 mil or 80 mil? What type of roofing warranty is wanted (10 year material, 15 year material or 20 year material?
A: New roof Basis of Design is to be Sika Sarnafil G410 60 mil Energy Smart (white) PVC fully adhered single ply roof with 25-30 year warranty. Refer to the roof details for additional information.

Q: Confirm there is no specification book?.
A: Specifications and Basis of Design criteria are included on the drawings.

Q: Are there cabinets that need to be installed? Countertops? What are the elevations for cabinets? Please provide elevation and specifications for control room A101 countertop.
A: There are countertops in the control room and a single countertop in the magnet room. Refer to detail on sheet A-301 for information.

Q: Will the Geotechnical report be provided by contractor or owner?
A: Contractor provided.

Q: Confirm exterior sheathing is 5/8" CDX plywood?
A: Exterior sheathing can either be 5/8" CDX Plywood or Exterior Glass-faced Gypsum Board.

Q: Plan sheet A-101 detail A1 shows a new fence. Please clarify?
A: Coordinate parking lot barriers' construction with Owner's representative.

Q: Are development order and impact fees by Owner?
A: Yes- Development Order fees are to be by Owner.

3 Specifications

N/A

4 Drawings

4.1 Architectural:

SHEET	DESCRIPTION
G-001	REVISED/UPDATED SHEET INDEX
A-100	ADDED SITE PLAN SHEET TO JOB
A-101	DETAIL A1

- DELETED SECTION REFERENCE "A2/A311" AT CONNECTION OF VESTIBLE & EXISTING BUILDING – NOT APPLICABLE.
- DELETED WALL SECTION REFERENCE "A4/A311" AT WEST WALL – THIS CALLOUT IS DUPLICATED ON THE WALL SECTION A1/A301
    - XREF - ADDED BAYER PENETRATION PANEL TO WEST WALL OF PENETRATION PANEL CLOSET #A102A. MOVED GE PENETRATION PANEL SOUTH TO ALLOW ROOM FOR BAYER PENETRATION PANEL.
    - XREF - ADDED CONCRETE CURB & GRAVEL AROUND PERIMETER OF BUILDING.
    - XREF - REMOVED RAMP & ADDED STEPS OUTSIDE MECHANICAL ROOM #A105
    - XREF - ADDED HANDRAILS TO CONCRETE PAD & STEPS OUTSIDE MECHANICAL ROOM #A105.

- XREF - ADDED OVERFLOW ROOF DRAIN/BRASS COW TONGUE DOWNSPOUT NOZZLE TO SOUTH EXTERIOR WALL OF BUILDING, ALONG WITH APPROPRIATE NOTE.

- ADDED NOTES FOR SOLID SURFACE COUNTERTOPS IN CONTROL ROOM AND MAGNET ROOM.

A-101 DETAIL A3

- ADDED DIMENSION TO HANDRAILS AT RAMP OUTSIDE VESTIBLE.
- ADDED DIMENSION TO MILLWORK IN CONTROL ROOM #A101
- ADDED DIMNSIONS TO CONCRETE PAD & STAIRS OUTSIDE MECHANICAL ROOM #A105.

A-111 DETAIL A2

- XREF - ADDED BAYER PENETRATION PANEL TO WEST WALL OF PENETRATION PANEL CLOSET #A102A. MOVED GE PENETRATION PANEL SOUTH TO ALLOW ROOM FOR BAYER PENETRATION PANEL.
- XREF - ADDED CONCRETE CURB AROUND PERIMETER OF BUILDING.
- XREF - REMOVED RAMP & ADDED STEPS OUTSIDE MECHANICAL ROOM #A105
- XREF - ADDED HANDRAILS TO CONCRETE PAD & STEPS OUTSIDE MECHANICAL ROOM #A105.
- XREF - ADDED OVERFLOW ROOF DRAIN BRASS COW TONGUE DOWNSPOUT NOZZLE TO WEST EXTERIOR WALL OF BUILDING, ALONG WITH APPROPRIATE NOTE.
- XREF - ADDED OVERFLOW ROOF DRAIN BRASS COW TONGUE DOWNSPOUT NOZZLE TO SOUTH EXTERIOR WALL OF BUILDING, ALONG WITH APPROPRIATE NOTE.

DETAIL A3

- REVISED FINISHES

A-121

- RECONFIGURE ROOF DRAIN AND OVERFLOW ROOF DRAIN LOCATIONS.
- VERIFY AND CORRECT SECTION REFERENCES
- DELETED WALL SECTION REFERENCE "A4/A311" AT SOUTH WALL – THIS CALLOUT IS DUPLICATED ON THE WALL SECTION A1/A301

A-201 DETAIL A1

- CHANGED BUILDING SECTION CALLOUT – CHANGED FROM "A1/A301" TO "C1/A301"
- ADDED GRADE ELEVATIONS FROM SITE PLAN
- REMOVED RAMP FROM MECH. ROOM, ADDED STEPS & HANDRAIL
- RELOCATED EXTERIOR LIGHT FIXTURE TO ABOVE SOLDIER COURSE BRICK ABOVE DOORS.

DETAIL A3

- CHANGED BUILDING SECTION CALLOUT – CHANGED FROM "A1/A301" TO "C1/A301"
- DELETED WALL SECTION CALLOUT A4/A312 – THAT WAS INCORRECT AND ALSO DUPLICATED ON BUILDING SECTION.
- ADDED GRADE ELEVATIONS FROM SITE PLAN
- ADDED HANDRAILS TO RAMP
- RELOCATED EXTERIOR LIGHT FIXTURE TO ABOVE SOLDIER COURSE BRICK
- RELOCATED EXTERIOR LIGHT FIXTURE ABOVE DOOR TO BELOW THE EXISTING CANOPY, BELOW SOLDIER COURSE BRICK
- ADDED OVERFLOW ROOF DRAIN BRASS COW TONGUE DOWNSPOUT NOZZLE TO SOUTH EXTERIOR WALL OF BUILDING, ALONG WITH APPROPRIATE NOTE.

DETAIL C1

- ADDED BUILDING SECTION CALLOUT "A1/A301".
- ADDED GRADE ELEVATIONS FROM SITE PLAN
- REMOVED RAMP FROM MECH. ROOM, ADDED STEPS & HANDRAIL
- RELOCATED EXTERIOR LIGHT FIXTURE TO ABOVE SOLDIER COURSE BRICK
- ADDED OVERFLOW ROOF DRAIN BRASS COW TONGUE DOWNSPOUT NOZZLE TO WEST EXTERIOR WALL OF BUILDING, ALONG WITH APPROPRIATE NOTE.

A-301 DETAIL A1

- ADDED WALL SECTION CALLOUTS "A2/A311 - SIM" & "A4/A311 - SIM"
- ADDED GRADE ELEVATIONS FROM SITE PLAN
- ADDED ADDITIONAL ROWS OF CMU TO ADJUST FOR ELEVATIONS
- ADDED GRAVEL LANDSCAPING
- ADDED HIDDEN LINES TO INDICATE FOOTERS IN BACKGROUND

DETAIL A3

- ADDED WALL SECTION CALLOUTS "A4/A311 - SIM"
- ADDED GRADE ELEVATIONS FROM SITE PLAN

- ADDED NEW CONCRETE PAD BY SOUTH WALL & APPROPRIATE ELEVATION MARKER
- ADDED ADDITIONAL ROWS OF CMU TO ADJUST FOR ELEVATIONS
- ADDED GRAVEL LANDSCAPING

DETAIL C1

- CHANGED WALL SECTION CALLOUT FROM "A4/A312" TO "A2/A11" (SOUTH WALL)
- ADDED "SIM" TO "A4/A311" WALL SECTION CALLOUT. (NORTH WALL)
- ADDED MILLWORK TO CONTROL ROOM AND DETAIL CALL OUT "C4/A301"
- ADDED GRADE ELEVATIONS FROM SITE PLAN
- ADDED ADDITIONAL ROWS OF CMU TO ADJUST FOR ELEVATIONS
- ADDED BAYER PENETRATION PANEL IN CLOSET, MOVED GE PENETRATION PANEL TO THE SOUTH.

DETAIL C4

- ADDED MILLWORK SECTION

DETAIL D4

- ADDED ROOF DRAIN DETAILS

A-311 DETAIL A2

- ADDED GRADE ELEVATIONS FROM SITE PLAN
- ADDED ADDITIONAL ROWS OF CMU TO ADJUST FOR ELEVATIONS
- ADDED GRAVEL LANDSCAPING

DETAIL A4

- ADDED "SIM" TO DETAIL CALLOUT "A2/A501"
- ADDED GRADE ELEVATIONS FROM SITE PLAN
- ADDED ADDITIONAL ROWS OF CMU TO ADJUST FOR ELEVATIONS
- ADDED GRAVEL LANDSCAPING

A-501 DETAIL A2

- ADDED GRADE ELEVATIONS FROM SITE PLAN
- ADDED GRAVEL LANDSCAPING
- ADDED ADDITIONAL ROWS OF CMU TO ADJUST FOR ELEVATIONS

A-521 DETAIL A2

- ADDED RAIN DRIP EDGE & SHIFTED NOTES DOWN

A-531 DETAIL B2

- CHANGED HANDRAIL NOTE TO INDICATE THEY ARE NOW TO BE REMOVED. FORMERLY THEY WERE TO BE RE-USED.

A-601 DETAIL C4

- REVISED DOOR SCHEDULE
- DELETED GENERAL NOTE "C".
- ADDED DOOR HARDWARE NOTES AND TYPES

DETAIL A4

- REVISED AND ADDED ADDITIONAL DIMS ON FRAMES

4.2 ELECTRICAL

E-001

a. Updated Sheet List Table to reflect new sheet numbering and newly added sheets.

E-002

b. Added Lightning Protection block to Legend.

E-101

c. Added Lightning Protection air terminals to be demolished.
d. Added Keynote 3 detailing lightning protection demolition.
e. Added Keynote 4 detailing lightning protection preservation.

E-111

f. Updated Sheet numbering from E-201 to better conform to AIA standards.
g. Updated Keynotes 8 through 10 referencing Bayer-supplied items.
h. Added Keynote 15 referencing Bayer-supplied penetration panel.
i. Updated numbering for subsequent Keynotes after adding Keynote 15.

j. Added Bayer penetration panel to plans, shifted GE penetration panel, and supplied power from existing circuit L6-18.
k. Removed two (2) card readers and rerouted circuit accordingly.
l. Added room name for Vestibule A000.

E-112

m. Updated Sheet numbering from E-301 to better conform to AIA standards.
n. Added Bayer penetration panel to plans and shifted GE penetration panel.
o. Added room name for Vestibule A000.

E-113

p. Updated Sheet numbering from E-401 to better conform to AIA standards.
q. Added Bayer penetration panel to plans and shifted GE penetration panel.
r. Added room name for Vestibule A000.

E-114

s. Updated Sheet numbering from E-501 to better conform to AIA standards.
t. Added Bayer penetration panel to plans and shifted GE penetration panel.
u. Added room name for Vestibule A000.

E-115

v. Added Sheet addressing lightning protection system.

E-501

w. Updated Sheet numbering from E-601 to better conform to AIA standards.

E-502

x. Updated Sheet numbering from E-602 to better conform to AIA standards.

E-503

y. Updated Sheet numbering from E-603 to better conform to AIA standards.
z. Added details for Bayer equipment and rearranged existing GE details.

E-504

aa. Updated Sheet numbering from E-604 to better conform to AIA standards.

E-505

bb. Added Sheet containing lightning protection details.

E-506

cc. Updated Sheet numbering from E-605 to better conform to AIA standards.

E-601

dd. Updated Sheet numbering from E-701 to better conform to AIA standards.
ee. Added Partial Grounding Diagram.

E-602

ff. Updated Sheet numbering from E-801 to better conform to AIA standards.
gg. Added Bayer Injector Controller to circuit with GE Operator Console.
hh. Added Bayer Penetration Panel to circuit with GE Penetration Panel.
ii. Revised circuit load for the Access Control circuit.

4.3 TELECOM

T-001

a. Updated Sheet List Table to reflect new sheet numbering and newly added sheets.

T-111

b. Updated Sheet numbering from E-301 to better conform to AIA standards.
c. Updated Keynotes 9 through 11 referencing Bayer-supplied items.
d. Added Keynote 16 referencing Bayer-supplied penetration panel.
e. Updated numbering for subsequent Keynotes after adding Keynote 16.
f. Added Bayer penetration panel to plans and shifted GE penetration panel.
g. Removed two (2) card readers.

T-501

h. Updated Sheet numbering from E-301 to better conform to AIA standards.

T-502

i. Updated Sheet numbering from E-301 to better conform to AIA standards.

Attachments:

Specifications
N/A

Drawings

G-001 COVER SHEET
LS-001 LIFE SAFETY PLAN
A-100 SITE PLAN
A-101 NEW WORK PLAN
A-111 REFLECTED CEILING PLAN, FINISH PLAN & FINISH SCHEDULE
A-121 ROOF PLAN
A-201 EXTERIOR ELEVATIONS
A-301 BUILDING SECTIONS
A-311 WALL SECTIONSA-501 DETAILS
A-501 DETAILS
A-521 HEAD, SILL, & JAMB DETAILS
A-531 PHOTO DETAILS RAMP & STOOP
A-601 DOOR SCHEDULE, DOOR & WINDOW TYPES
P-101 PLUMBING FLOOR PLAN AND RISER DIAGRAMS
M-001 HVAC LEGEND, SCHEDULE AND NOTES
M-002 HVAC SCHEDULE
M-101 HVAC FLOOR PLAN
M-301 HVAC CONTROLS
M-203 HVAC DETAILS
E-001 LEGEND AND NOTES
E-002 LEGEND AND NOTES
E-101 FLOOR PLAN – DEMO
E-111 FLOOR PLAN – POWER
E-112 FLOOR PLAN - MECH. POWER
E-113 FLOOR PLAN - FIRE ALARM
E-114 FLOOR PLAN – LIGHTING
E-115 FLOOR PLAN - LIGHTNING PROTECTION
E-501 ELECTRICAL DETAILS
E-502 ELECTRICAL DETAILS
E-503 ELECTRICAL DETAILS
E-504 ELECTRICAL DETAILS
E-505 LIGHTNING PROTECTION DETAILS
E-506 LIGHTING CONTROLS & FIXTURE SCHEDULE
E-601 SINGLE LINE RISERS
E-602 ELECTRICAL SCHEDULES & TCC CURVES
T-001 LEGEND AND DETAILS
T-111 FLOOR PLAN – TELECOM
T-501 TELECOMDETAILS
T-502 TELECOMDETAILS

End of HCA Diagnostic Center MRI Addition Addendum No. 1

MRI ADDITION TO HCA GULF COAST HOSPITAL DIAGNOSTIC CENTER

HCA FLORIDA GULF COAST HOSPITAL
2024 STATE AVENUE
PANAMA CITY, FL 32405

GENERAL INFORMATION

PROJECT NAME: DIAGNOSTICS MRI ADDITION
COUNTY: BAY COUNTY
BUILDING TYPE: Type IIB, SPRINKLERED
NUMBER OF FLOORS: 1

APPLICABLE CODES

2023 FLORIDA BUILDING CODE - EXISTING BUILDING, 8TH EDITION (FBC-EB)
2023 FLORIDA BUILDING CODE - BUILDING, 8th EDITION (FBC-B)
2023 FLORIDA BUILDING CODE - ACCESSIBILITY, 8th EDITION (FBC-A)
2023 FLORIDA BUILDING CODE - MECHANICAL, 8th EDITION (FBC-M)
2023 FLORIDA BUILDING CODE - PLUMBING, 8th EDITION (FBC-P)
2023 FLORIDA BUILDING CODE - ENERGY CONSERVATION, 8th EDITION (FBC-EC)
2023 FLORIDA FIRE PREVENTION CODE, 8th ED. *BASED ON NFPA 1& NFPA 101*
NATIONAL ELECTRICAL CODE, (NEC) 2023 EDITION

B2 CODE DATA
SCALE: NTS

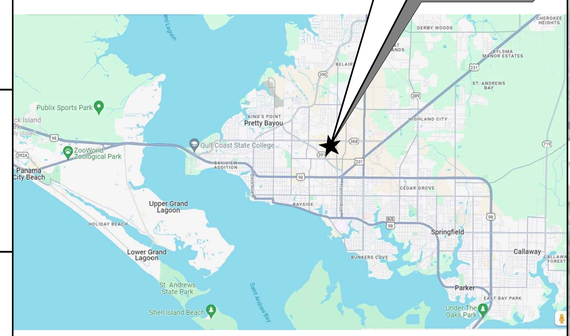

B3 PROJECT LOCATION MAP
SCALE: NTS

A4 AREA PLAN
SCALE: NTS

ARCHITECT:	FIRE PROTECTION:	ELECTRICAL ENGINEER:	STRUCTURAL	CLIENT:
DAG ARCHITECTS, INC. 455 HARRISON AVE. SUITE I PANAMA CITY, FL 32401 PHONE: (850) 387-1671 PIC: OWEN GIPSON, AIA EMAIL: OGIPSON@DAGARCHITECTS.COM	WATFORD ENGINEERING INC. 4452 CLINTON ST. MARIANNA, FL 32446 PHONE: (850) 526 - 3447 PIC: DAVID WATFORD EMAIL: DAVID@WATFORD-ENGINEERING.COM	HG ENGINEERS 621 N TYNDALL PARKWAY PANAMA CITY, FL 32404 PHONE: (850) 243-6723 PIC: DAN WHITE EMAIL: DWHITE@HGENGINEERS.COM	PENNONI 1705 SOUTH GADSDEN STREET, SUITE 100 TALLAHASSEE, FL 32301 PHONE: (850) 536-8140 PIC: JUSTIN DUNCAN EMAIL: JDUNCAN@PENNONI.COM	HCA FLORIDA GULF COAST HOSPITAL 449 W. 23RD STREET PANAMA CITY, FL 32405 PHONE: (850) 747-7103 COO: JOEL LEONE EMAIL: JOEL.LEONE@HCAHEALTHCARE.COM

A1 PROJECT TEAMS AND DISCIPLINE ALLOCATION
SCALE: NTS

VENDOR DRAWINGS:

A4 SHEET INDEX
SCALE: NTS

DAG ARCHITECTS
DAG Architects AR0009694
455 Harrison Ave Suite I Panama City, FL 32401
850.387.1671
www.DAGarchitects.com

BID DOCUMENTS

HCA FLORIDA GULF COAST HOSPITAL
Outpatient Rehabilitation & Diagnostic Center
DIAGNOSTICS MRI ADDITION
2024 STATE STREET, PANAMA CITY, FL 32405

HCA Florida
Gulf Coast Hospital

REVISIONS:

No.	Description	Date
1	ADDENDUM 1	04.22.2025

COVER SHEET

PROJECT NUMBER	24107
DATED	03/28/2025

G-001

24107
BID DOCUMENTS
2025-04-24

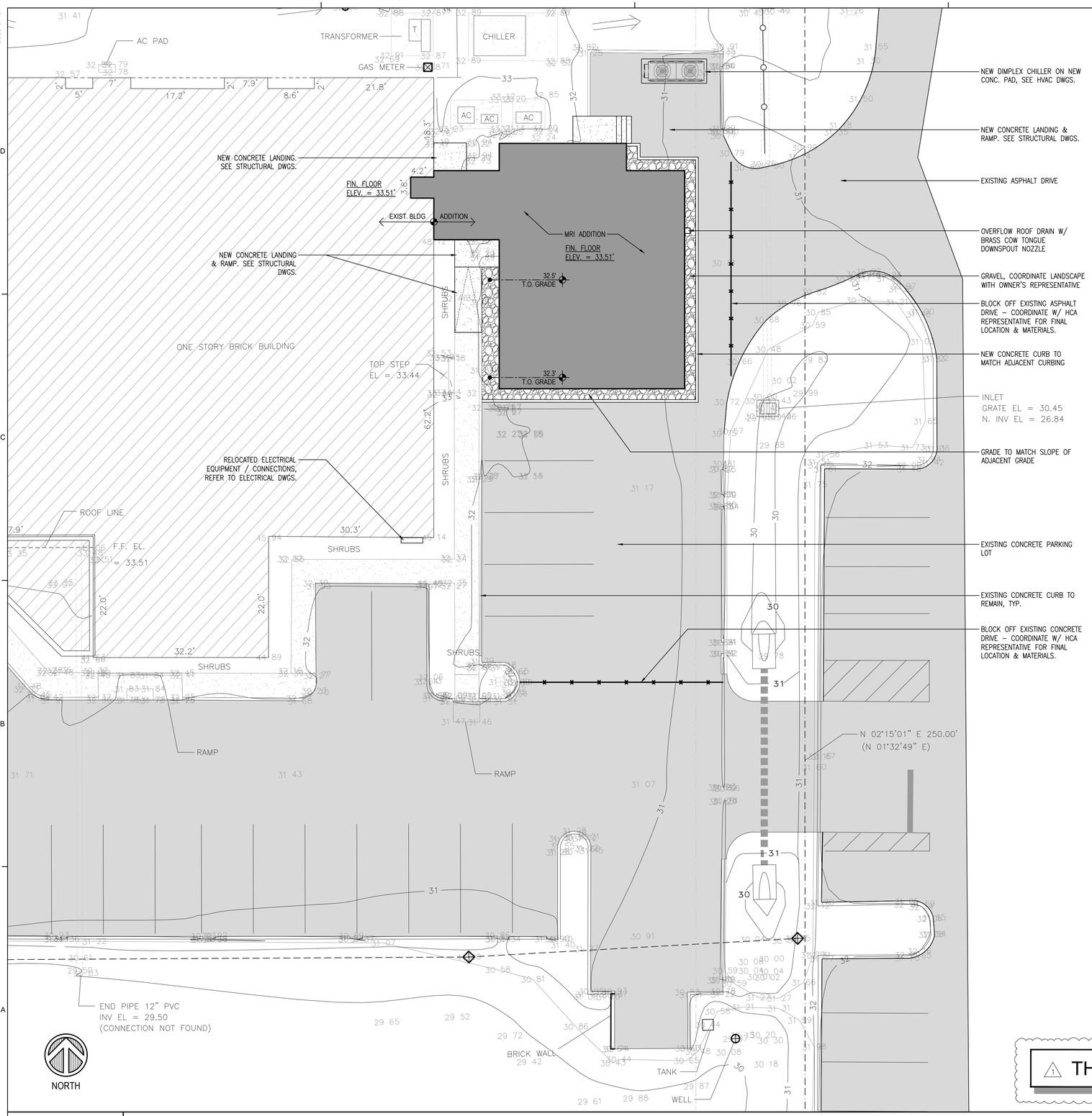

THIS SHEET ADDED TO SET

GENERAL NOTE:
CIVIL INFORMATION IS FROM PREVIOUS PROJECT "GULF COAST DIAGNOSTICS CENTER EXPANSION, 2024 STATE AVE., PANAMA CITY, FLORIDA" AS PREPARED BY McNEIL CARROLL ENGINEERING ON 9/23/2021.

A1	SITE PLAN
SCALE: 1" = 10'-0"	

DAG ARCHITECTS
DAG Architects AR0009694
455 Harrison Ave Suite I Panama City, FL 32401
850.387.1671
www.DAGarchitects.com

BID DOCUMENTS

HCA FLORIDA GULF COAST HOSPITAL
Outpatient Rehabilitation & Diagnostic Center
DIAGNOSTICS MRI ADDITION
2024 STATE STREET, PANAMA CITY, FL 32405

HCA Florida
Gulf Coast Hospital

REVISIONS:

No.	Description	Date
1	ADDENDUM 1	04.22.2025

SITE PLAN

PROJECT NUMBER	24107
DATED	03/28/2025

A-100

24107
BID DOCUMENTS
2025-04-25

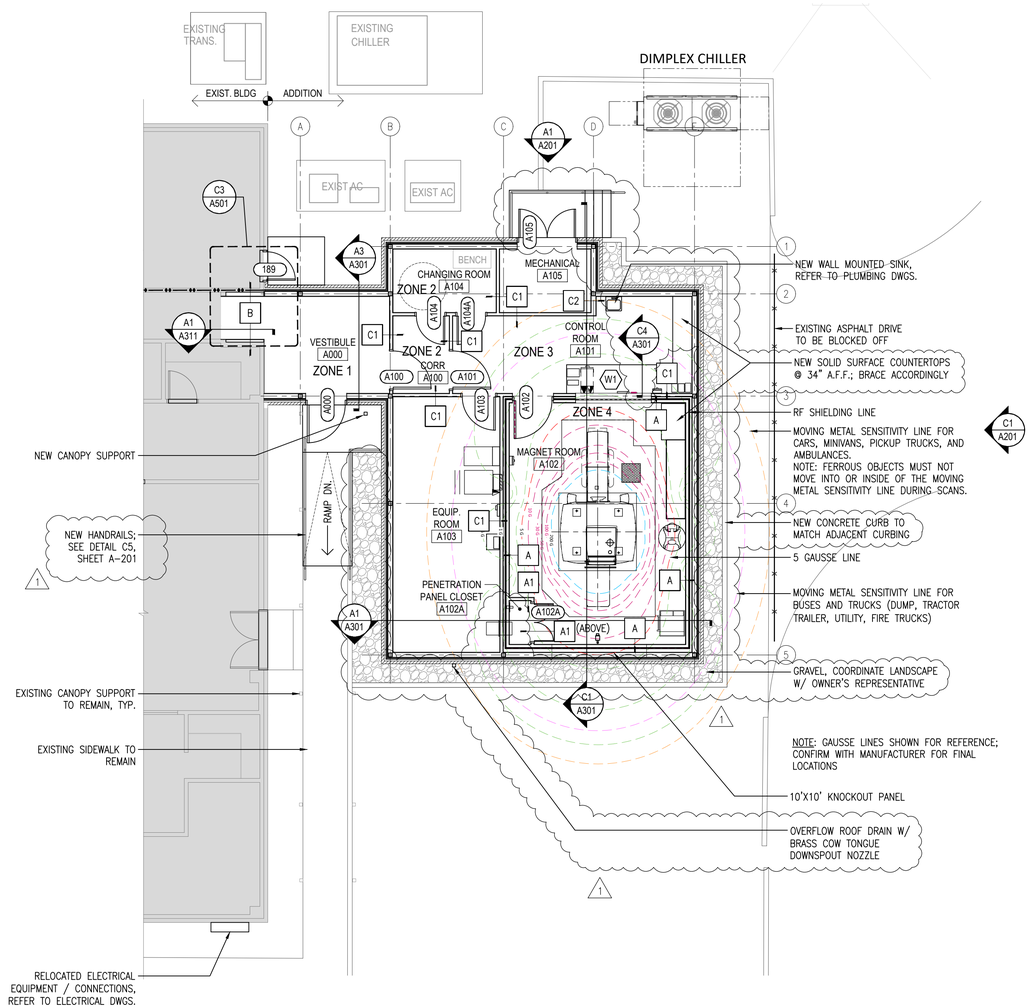

A1 ANNOTATION PLAN
SCALE: 1/8" = 1'-0"

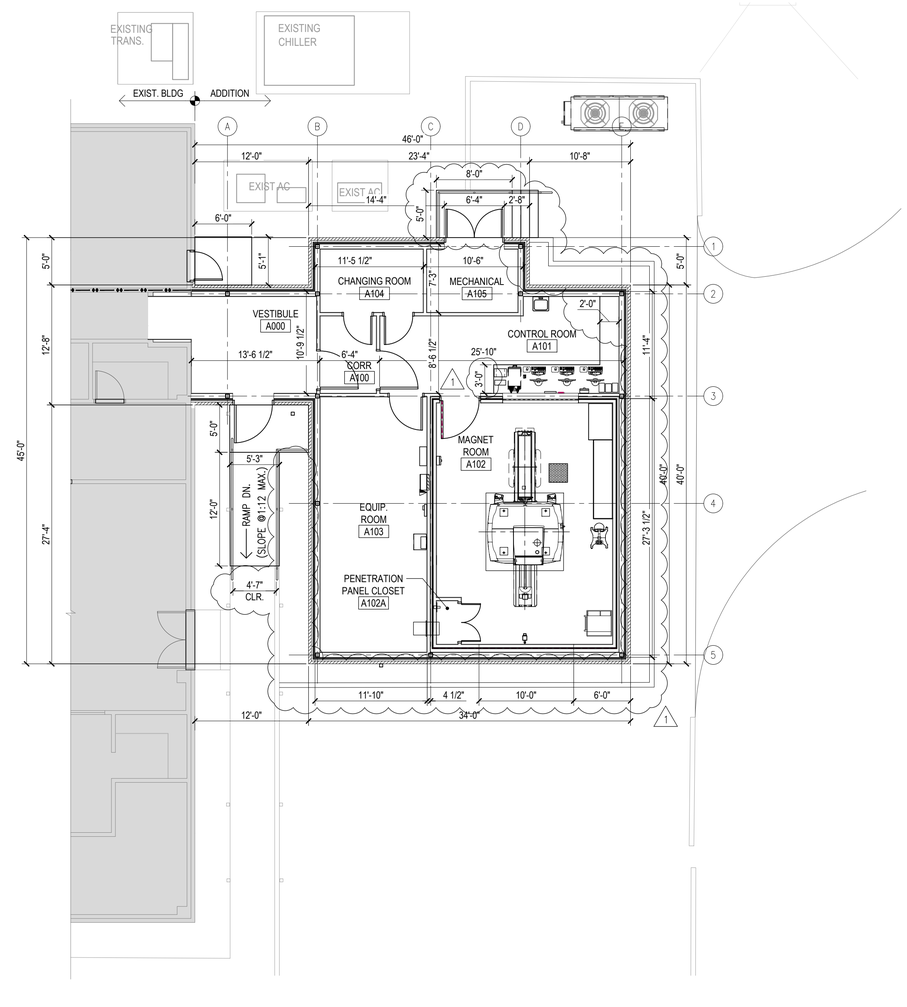

A3 DIMENSION PLAN
SCALE: 1/8" = 1'-0"

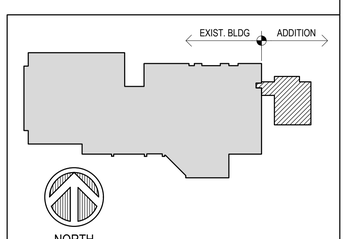

A5 KEY PLAN
SCALE: NTS

DAG ARCHITECTS
DAG Architects AR0009694
455 Harrison Ave Suite I Panama City, FL 32401
850.387.1671
www.DAGarchitects.com

BID DOCUMENTS

HCA FLORIDA GULF COAST HOSPITAL
Outpatient Rehabilitation & Diagnostic Center
DIAGNOSTICS MRI ADDITION
2024 STATE STREET, PANAMA CITY, FL 32405

HCA Florida
Gulf Coast Hospital

REVISIONS:

No.	Description	Date
1	ADDENDUM 1	04.22.2025

NEW WORK PLAN

PROJECT NUMBER	24107
DATED	03/28/2025

A-101

24107
BID DOCUMENTS
2025-04-25

ROOM NO.	ROOM NAME	SPL	FINISH MATERIAL	MANUFACTURER	COLLECTION / SERIES	PRODUCT NAME	COLOR	REMARKS
FLOOR								
A000	VESTIBULE	--	MATCH EXISTING LVT	TARKETT	TBD	TBD	TBD	
A100	CORRIDOR	XX	LVT-1	TARKETT				
A101	CONTROL ROOM	XX	LVT-1	TARKETT				
A102	MAGNET ROOM	XX	LVT-1	TARKETT				FINISH ONLY SIBLING WALL INSIDE MAGNET ROOM
A102A	PENETRATION PANEL CLOSET	XX	LVT-1	TARKETT				FINISH ONLY SIBLING WALL INSIDE MAGNET ROOM
A103	EQUIPMENT ROOM	CONC.	SEALED CONC.					
A104	CHANGING ROOM	XX	LVT-1	TARKETT				
A105	MECHANICAL	CONC.	SEALED CONC.					
BASE								
A000	VESTIBULE	--	MATCH EXISTING RB	TARKETT	TBD	TBD	TBD	
A100	CORRIDOR	RB-1	RUBBER	TARKETT				
A101	CONTROL ROOM	RB-1	RUBBER	TARKETT				
A102	MAGNET ROOM	RB-1	RUBBER	TARKETT				FINISH ONLY SIBLING WALL INSIDE MAGNET ROOM
A102A	PENETRATION PANEL CLOSET	RB-1	RUBBER	TARKETT				FINISH ONLY SIBLING WALL INSIDE MAGNET ROOM
A103	EQUIPMENT ROOM	RB-1	RUBBER	TARKETT				
A104	CHANGING ROOM	RB-1	RUBBER	TARKETT				
A105	MECHANICAL							
WALL FINISH								
A000	VESTIBULE	P-2	PAINT	SHERWIN WILLIAMS	TBD	XX	TBD	PATCH AND REPAIR EXISTING MATERIALS IF NECESSARY
A100	CORRIDOR	P-2	PAINT	SHERWIN WILLIAMS	TBD		TBD	
A101	CONTROL ROOM	P-1	PAINT	SHERWIN WILLIAMS	TBD		TBD	
A102	MAGNET ROOM	P-1	PAINT	SHERWIN WILLIAMS	TBD		TBD	
A102A	PENETRATION PANEL CLOSET	P-1	PAINT	SHERWIN WILLIAMS	TBD		TBD	
A103	EQUIPMENT ROOM	P-2	PAINT	SHERWIN WILLIAMS	TBD		TBD	
A104	CHANGING ROOM	P-2	PAINT	SHERWIN WILLIAMS	TBD		TBD	
A105	MECHANICAL		PAINT	SHERWIN WILLIAMS	TBD		TBD	
CEILING								
A000	VESTIBULE	ACT-1	ACOUSTIC CEILING TILE	ARMSTRONG	TBD	TBD	TBD	
A100	CORRIDOR	ACT-1	ACOUSTIC CEILING TILE	ARMSTRONG	TBD	TBD	TBD	
A101	CONTROL ROOM	ACT-1	ACOUSTIC CEILING TILE	ARMSTRONG	TBD	TBD	TBD	
A102	MAGNET ROOM	ACT-1	ACOUSTIC CEILING TILE	ARMSTRONG	TBD	TBD	TBD	ARMSTRONG 2'X2' OPTIMA HEALTH 1" SQUARE TEGULAR ON 30'/0 "CLEAN ROOM" 15/16" ALUMINUM TEE GRID
A102A	PENETRATION PANEL CLOSET	ACT-1	ACOUSTIC CEILING TILE	ARMSTRONG	TBD	TBD	TBD	FINISH ONLY SIBLING WALL INSIDE MAGNET ROOM
A103	EQUIPMENT ROOM	XX						
A104	CHANGING ROOM	ACT-1	ACOUSTIC CEILING TILE	ARMSTRONG	TBD	TBD	TBD	
A105	MECHANICAL	XX						
OTHER								
#	XX	GR-1	GROUT	TBD	TBD		TBD	
#	XX	GR-2	GROUT		PAINT			
#	XX	XX	T-1		WT			

ROOM FINISH GENERAL NOTES:
1. ALL COLORS AND PRODUCT MANUFACTURERS TO BE DETERMINED, AND ARE TO BE IN ACCORDANCE WITH THE GCSC DESIGN STANDARDS FOR NEW CONSTRUCTION; IF IN DOUBT, COORDINATE WITH ARCHITECT, OWNER AND TENANT.
2. ALIGN FLOORING CHANGES WITH CORNER OF WALL, WHERE APPLICABLE.
3. PROVIDE FLOORING TRANSITION STRIPS AT CHANGE IN FLOORING.
4. CONTRACTOR TO PREP EXISTING WALL SURFACES TO ACCEPT NEW FINISH WORK.

A3 FINISH SCHEDULE

SCALE: 1/8" = 1'-0"

GENERAL NOTES

1. CONTRACTORS SHALL COORDINATE ALL WORK, SHOWN OR UN-SHOWN, WITH ALL OTHER DISCIPLINES.
2. CONTRACTOR SHALL PROVIDE REINFORCING [TYPE TBD] BEHIND ALL CEILING MOUNTED EQUIPMENT.
3. REFER TO FINISH SCHEDULE(S) ADDITIONAL INFORMATION.
4. ALL ACCESS PANEL SIZES AND LOCATIONS TO BE COORDINATED WITH MECHANICAL, ELECTRICAL, PLUMBING, AND FIRE SPRINKLER WORK.
5. CENTER ACT GRID AND LIGHTS WITHIN EACH ROOM, UNO.
6. REFER TO ELECTRICAL FOR LIGHTING FIXTURE SCHEDULE(S).
7. ALL FIRE SPRINKLER HEADS AND ELECTRICAL FIXTURES SHALL BE CENTERED WITHIN CEILING TILES, UNO.
8. CEILING HEIGHTS NOTED REFERENCE ELEVATION ABOVE FINISH FLOOR OF ASSOCIATED BUILDING LEVEL.

FLOORING LEGEND

SEALED CONCRETE

LVT

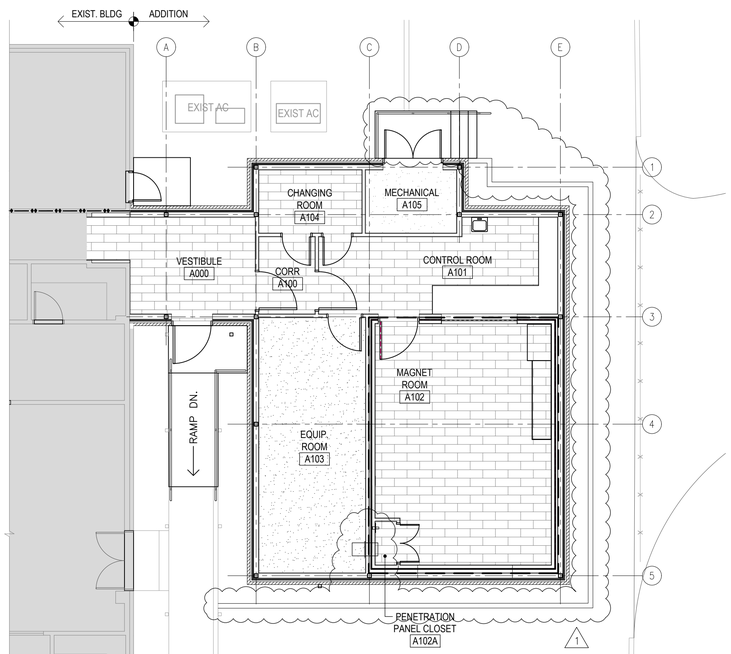

NORTH

A2 FINISH PLAN

SCALE: 1/8" = 1'-0"

GENERAL NOTES

1. CONTRACTORS SHALL COORDINATE ALL WORK, SHOWN OR UN-SHOWN, WITH ALL OTHER DISCIPLINES.
2. CONTRACTOR SHALL PROVIDE REINFORCING [TYPE TBD] BEHIND ALL CEILING MOUNTED EQUIPMENT.
3. REFER TO FINISH SCHEDULE(S) ADDITIONAL INFORMATION.
4. ALL ACCESS PANEL SIZES AND LOCATIONS TO BE COORDINATED WITH MECHANICAL, ELECTRICAL, PLUMBING, AND FIRE SPRINKLER WORK.
5. CENTER ACT GRID AND LIGHTS WITHIN EACH ROOM, UNO.
6. REFER TO ELECTRICAL FOR LIGHTING FIXTURE SCHEDULE(S).
7. ALL FIRE SPRINKLER HEADS AND ELECTRICAL FIXTURES SHALL BE CENTERED WITHIN CEILING TILES, UNO.
8. CEILING HEIGHTS NOTED REFERENCE ELEVATION ABOVE FINISH FLOOR OF ASSOCIATED BUILDING LEVEL.

GENERAL NOTES

1. CONTRACTORS SHALL COORDINATE ALL WORK, SHOWN OR UN-SHOWN, WITH ALL OTHER DISCIPLINES.
2. CONTRACTOR SHALL PROVIDE REINFORCING [TYPE TBD] BEHIND ALL CEILING MOUNTED EQUIPMENT.
3. REFER TO FINISH SCHEDULE(S) ADDITIONAL INFORMATION.
4. ALL ACCESS PANEL SIZES AND LOCATIONS TO BE COORDINATED WITH MECHANICAL, ELECTRICAL, PLUMBING, AND FIRE SPRINKLER WORK.
5. CENTER ACT GRID AND LIGHTS WITHIN EACH ROOM, UNO.
6. REFER TO ELECTRICAL FOR LIGHTING FIXTURE SCHEDULE(S).
7. ALL FIRE SPRINKLER HEADS AND ELECTRICAL FIXTURES SHALL BE CENTERED WITHIN CEILING TILES, UNO.
8. CEILING HEIGHTS NOTED REFERENCE ELEVATION ABOVE FINISH FLOOR OF ASSOCIATED BUILDING LEVEL.

RCP NOTES

1. SEE FINISH SCHEDULE FOR CEILING HEIGHTS.
2. REFER TO ELECTRICAL DOCUMENTS FOR SPECIFIC FIXTURE TYPES.
3. REFER TO MECHANICAL DRAWINGS FOR ADDITIONAL INFORMATION.

LEGEND

- EXPOSED STRUCTURE (NO CEILING) WALLS TO EXTEND TO UNDERSIDE OF STRUCTURE
- SUSPENDED ACOUSTICAL CEILING TILE (ACT)
- GYPSUM BOARD CEILING OR SOFFIT (GYP.BD.)
- EXTERIOR WALL MOUNTED FIXTURE– REFER TO ELECTRICAL DWGS
- WALL MOUNTED FIXTURE– REFER TO ELECTRICAL DWGS
- RECESSED FIXTURE– REFER TO ELECTRICAL DWGS
- RECESSED 2X4 LIGHT FIXTURE– REFER TO ELECTRICAL DRAWINGS
- RECESSED 2x2 LIGHT FIXTURE– REFER TO ELECTRICAL DRAWINGS
- SURFACE MOUNTED LED LIGHT FIXTURE– REFER TO ELECTRICAL DRAWINGS
- WALL MOUNTED EXIT LIGHT– REFER TO ELECTRICAL DRAWINGS
- CEILING MTD. EXIT LIGHT w/DIRECTIONAL ARROW– REFER TO ELECTRICAL DRAWINGS
- WALL MOUNTED EXIT LIGHT W/EMER. LIGHTING– REFER TO ELECTRICAL DRAWINGS
- HVAC EXHAUST AIR GRILLE– REFER TO MECHANICAL DWGS
- HVAC RETURN AIR GRILLE– REFER TO MECHANICAL DWGS
- HVAC SUPPLY DIFFUSER– REFER TO MECHANICAL DWGS
- WALL MOUNTED EMERGENCY LIGHT– REFER TO ELECTRICAL DRAWINGS
- CABLE TRAY (EXPOSED)

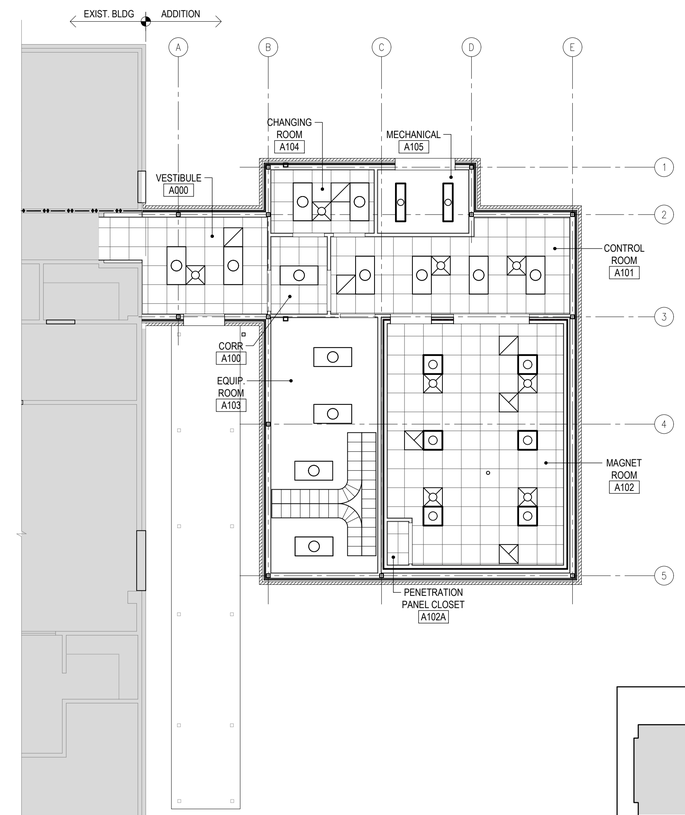

NORTH

A1 REFLECTED CEILING PLAN

SCALE: 1/8" = 1'-0"

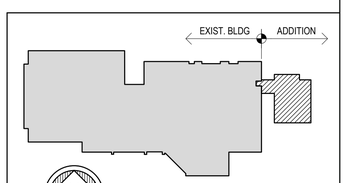

NORTH

A5 KEY PLAN

SCALE: NTS

DAG ARCHITECTS
DAG Architects AR0009694
455 Harrison Ave Suite I Panama City, FL 32401
850.387.1671
www.DAGarchitects.com

BID DOCUMENTS

HCA FLORIDA GULF COAST HOSPITAL
Outpatient Rehabilitation & Diagnostic Center
DIAGNOSTICS MRI ADDITION
2024 STATE STREET, PANAMA CITY, FL 32405

HCA Florida
Gulf Coast Hospital

REVISIONS:

No.	Description	Date
1	ADDENDUM 1	04.22.2025

REFLECTED CLG. PLAN, FINISH PLAN & FINISH SCHEDULE

PROJECT NUMBER	24107
DATED	03/28/2025

A-111

24107
BID DOCUMENTS
2025-04-24

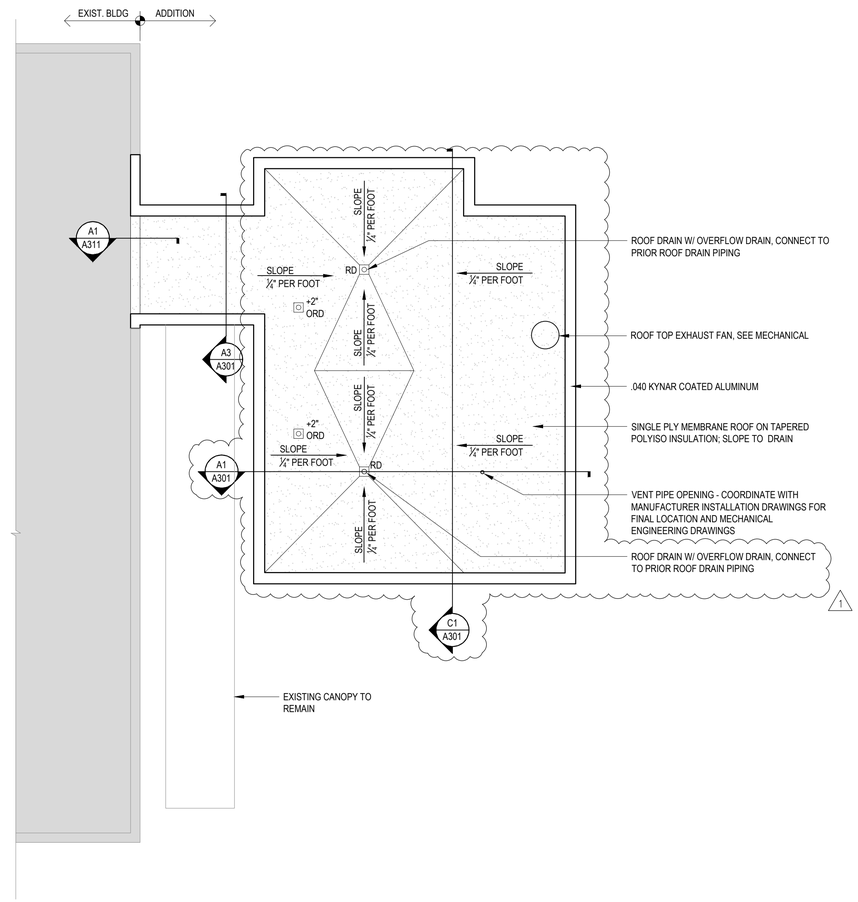

NORTH

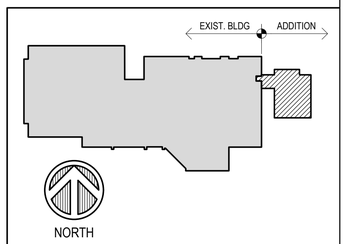

A1	ROOF PLAN
SCALE: 1/8" = 1'-0"	

A5	KEY PLAN
SCALE: NTS	

DAG ARCHITECTS
DAG Architects AR0009694
455 Harrison Ave Suite I Panama City, FL 32401
850.387.1671
www.DAGarchitects.com

BID DOCUMENTS

HCA FLORIDA GULF COAST HOSPITAL
Outpatient Rehabilitation & Diagnostic Center
DIAGNOSTICS MRI
ADDITION
2024 STATE STREET, PANAMA CITY, FL 32405

HCA Florida
Gulf Coast Hospital

REVISIONS:

No.	Description	Date
1	ADDENDUM 1	04.22.2025

ROOF PLAN

PROJECT NUMBER	24107
DATED	03/28/2025

A-121

24107
BID DOCUMENTS
2025-04-25

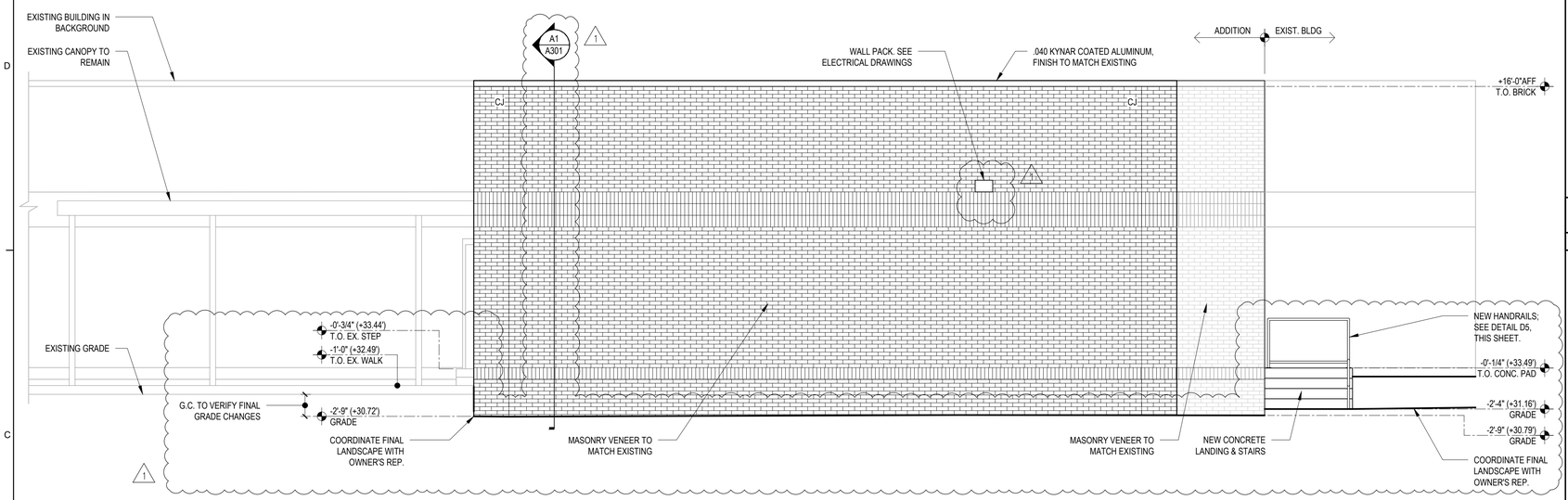

ALL BRICK AND MORTAR TO MATCH EXISTING

C1	EAST ELEVATION
SCALE: 1/4" = 1'-0"	

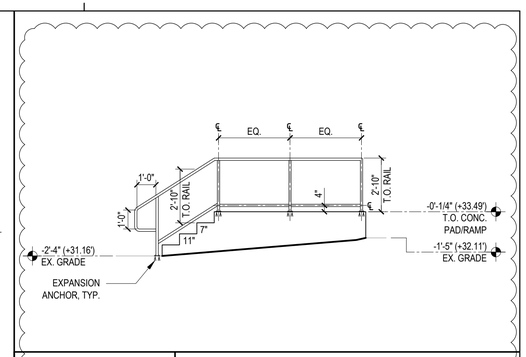

D5	HAND RAIL ELEVATION
SCALE: 1/4" = 1'-0"	NEW PAD/STAIR @ MECHANICAL ROOM

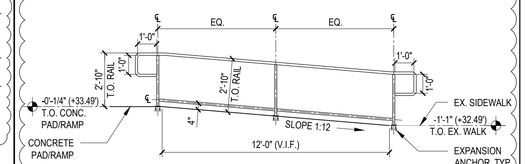

C5	HAND RAIL ELEVATION
SCALE: 1/4" = 1'-0"	NEW RAMP @ VESTIBULE

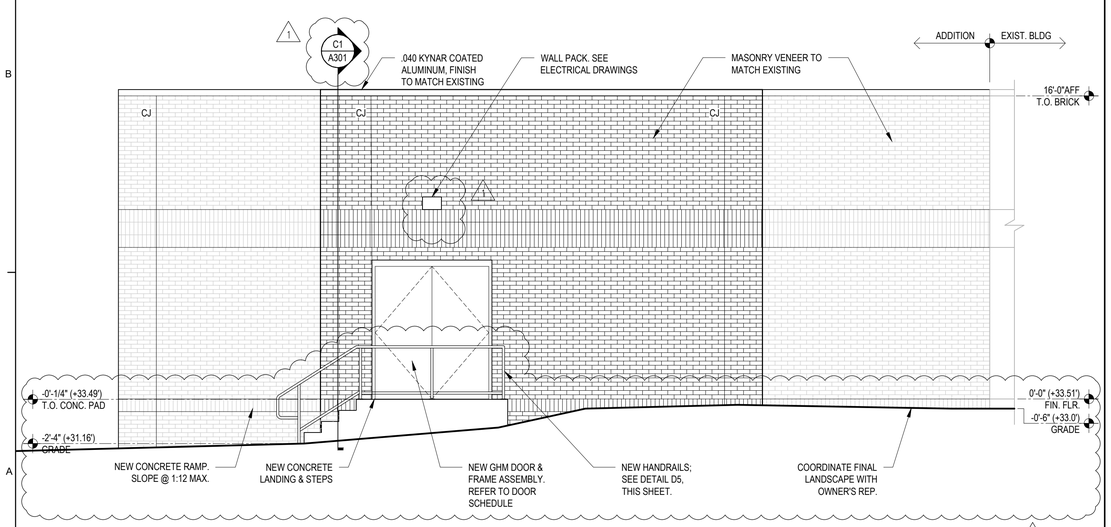

ALL BRICK AND MORTAR TO MATCH EXISTING

A1	NORTH ELEVATION
SCALE: 1/4" = 1'-0"	

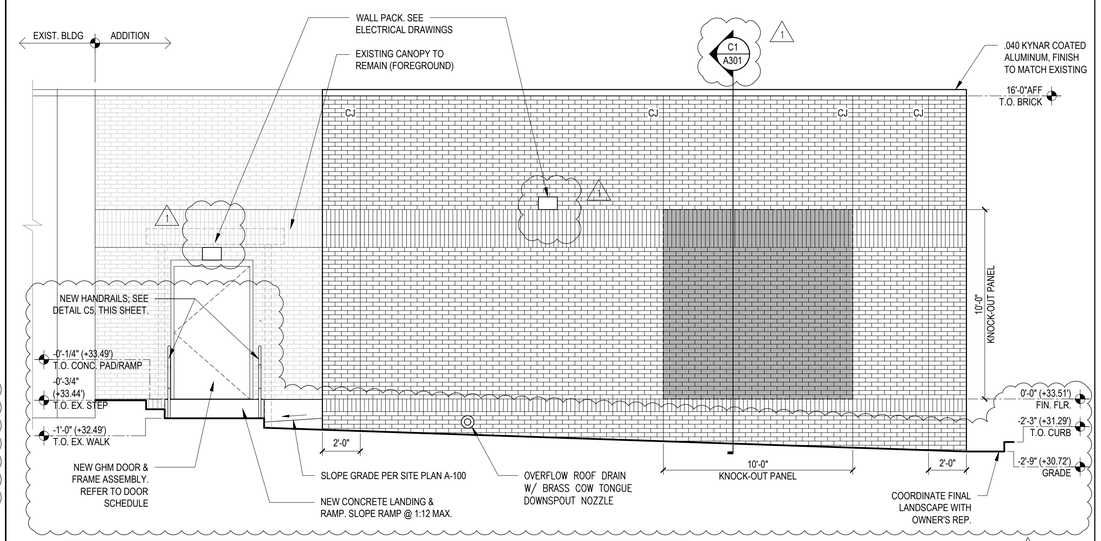

ALL BRICK AND MORTAR TO MATCH EXISTING

A3	SOUTH ELEVATION
SCALE: 1/4" = 1'-0"	

DAG ARCHITECTS
DAG Architects AR0009694
455 Harrison Ave Suite I Panama City, FL 32401
850.387.1671
www.DAGarchitects.com

BID DOCUMENTS

HCA FLORIDA GULF COAST HOSPITAL
Outpatient Rehabilitation & Diagnostic Center
DIAGNOSTICS MRI ADDITION
2024 STATE STREET, PANAMA CITY, FL 32405

HCA Florida
Gulf Coast Hospital

REVISIONS:

No.	Description	Date
1	ADDENDUM 1	04.22.2025

EXTERIOR ELEVATIONS

PROJECT NUMBER	24107
DATED	03/28/2025

A-201

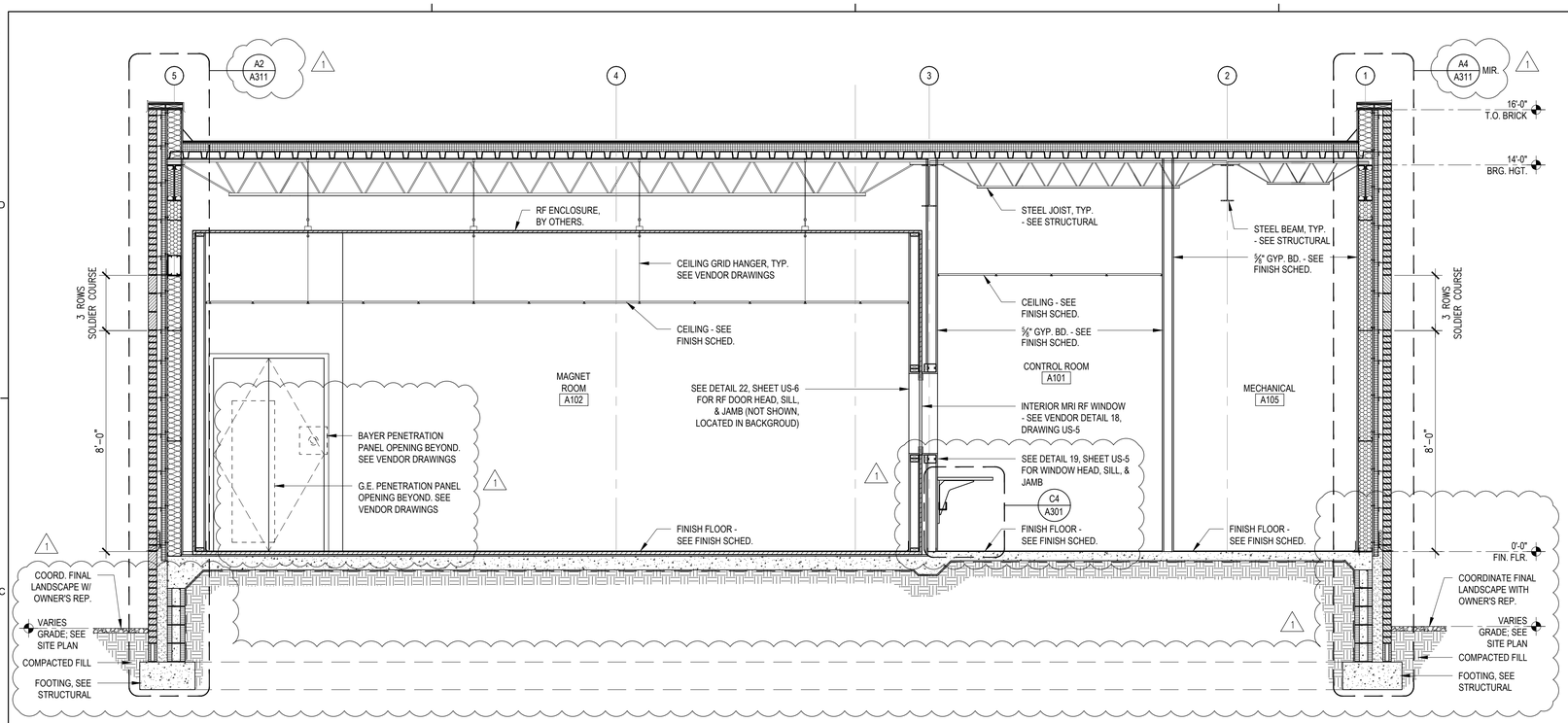

C1 BUILDING SECTION

SCALE: 3/8" = 1'-0"

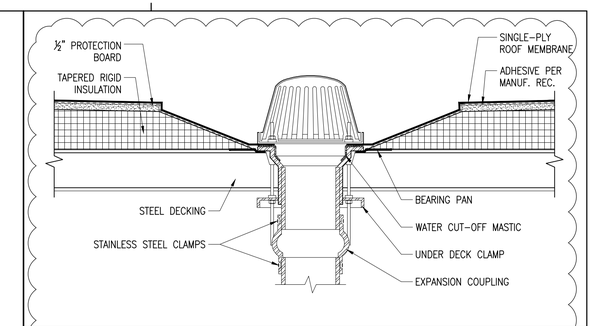

D4 ROOF DRAIN DETAIL

SCALE: 1" = 1'-0"

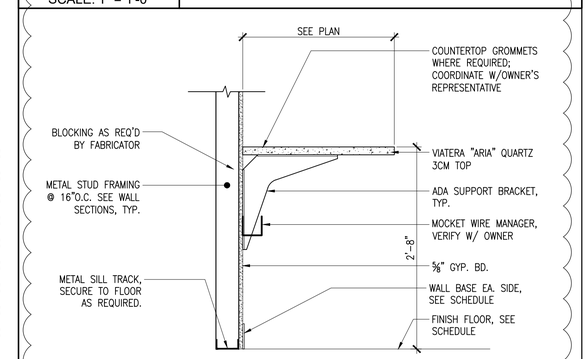

C4 MILLWORK SECTION

SCALE: 1" = 1'-0"

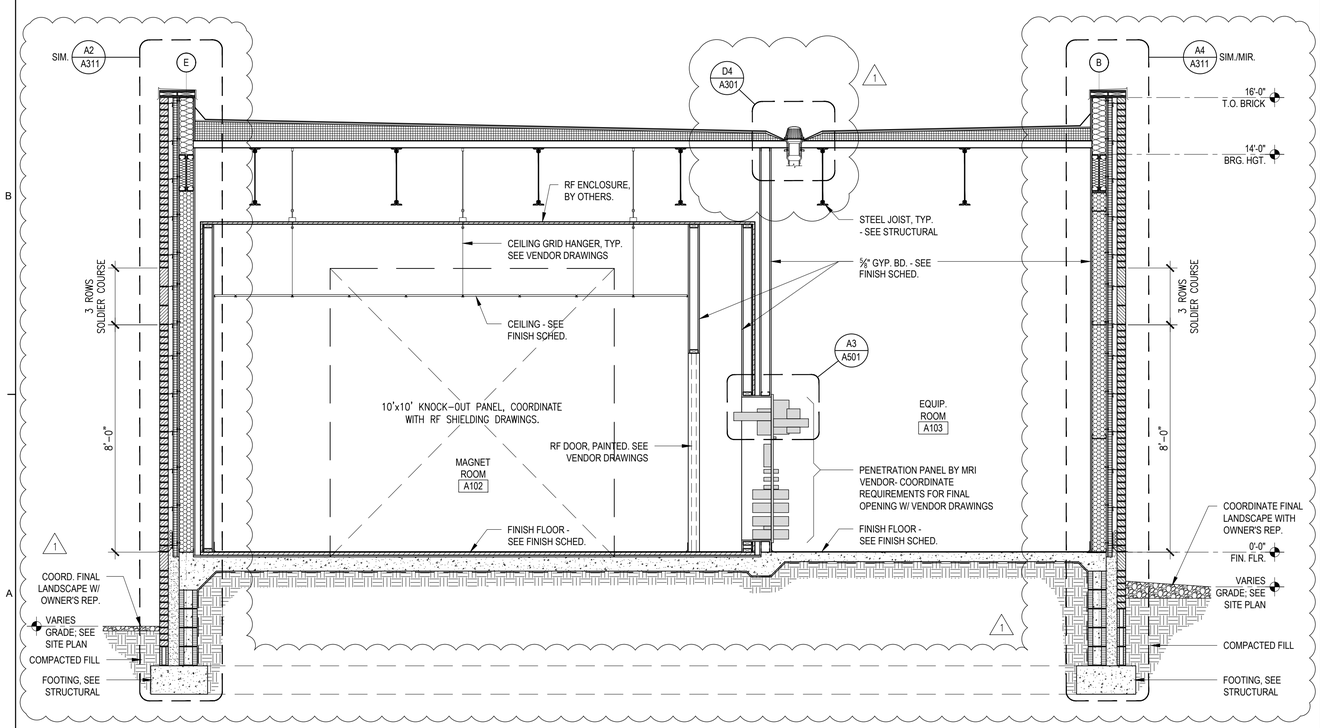

A1 BUILDING SECTION

SCALE: 3/8" = 1'-0"

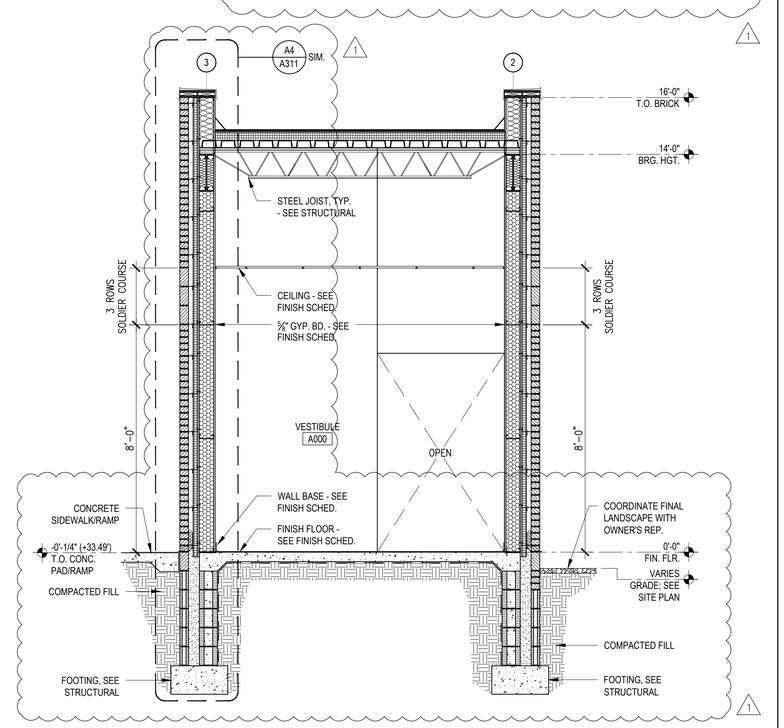

A3 BUILDING SECTION

SCALE: 3/8" = 1'-0"

DAG ARCHITECTS
DAG Architects AR0009694
455 Harrison Ave Suite I Panama City, FL 32401
850.387.1671
www.DAGarchitects.com

BID DOCUMENTS

HCA FLORIDA GULF COAST HOSPITAL
Outpatient Rehabilitation & Diagnostic Center
DIAGNOSTICS MRI ADDITION
2024 STATE STREET, PANAMA CITY, FL 32405

HCA Florida
Gulf Coast Hospital

REVISIONS:

No.	Description	Date
1	ADDENDUM 1	04.22.2025

BUILDING SECTIONS

PROJECT NUMBER	24107
DATED	03/28/2025

A-301

24107
BID DOCUMENTS
2025-04-25

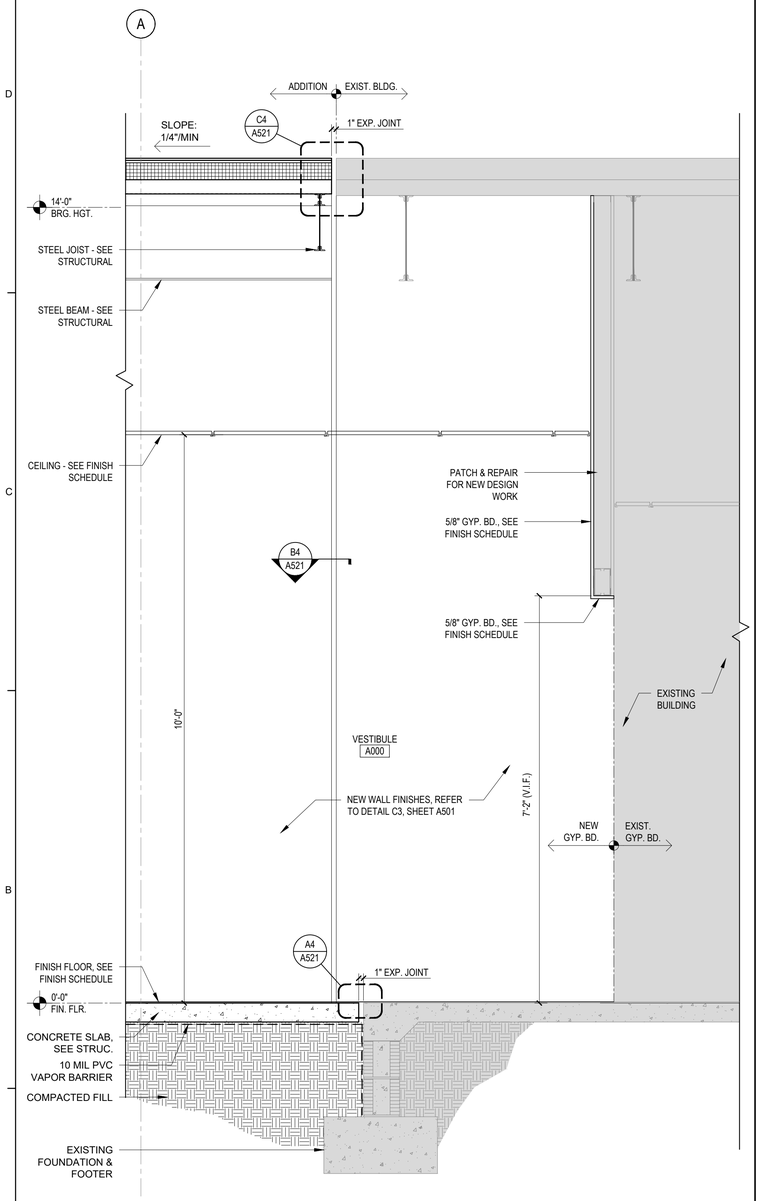

A1	WALL SECTION - TYP.
SCALE: 3/4" = 1'-0"	@ NEW TO EXSTING CONNECTION

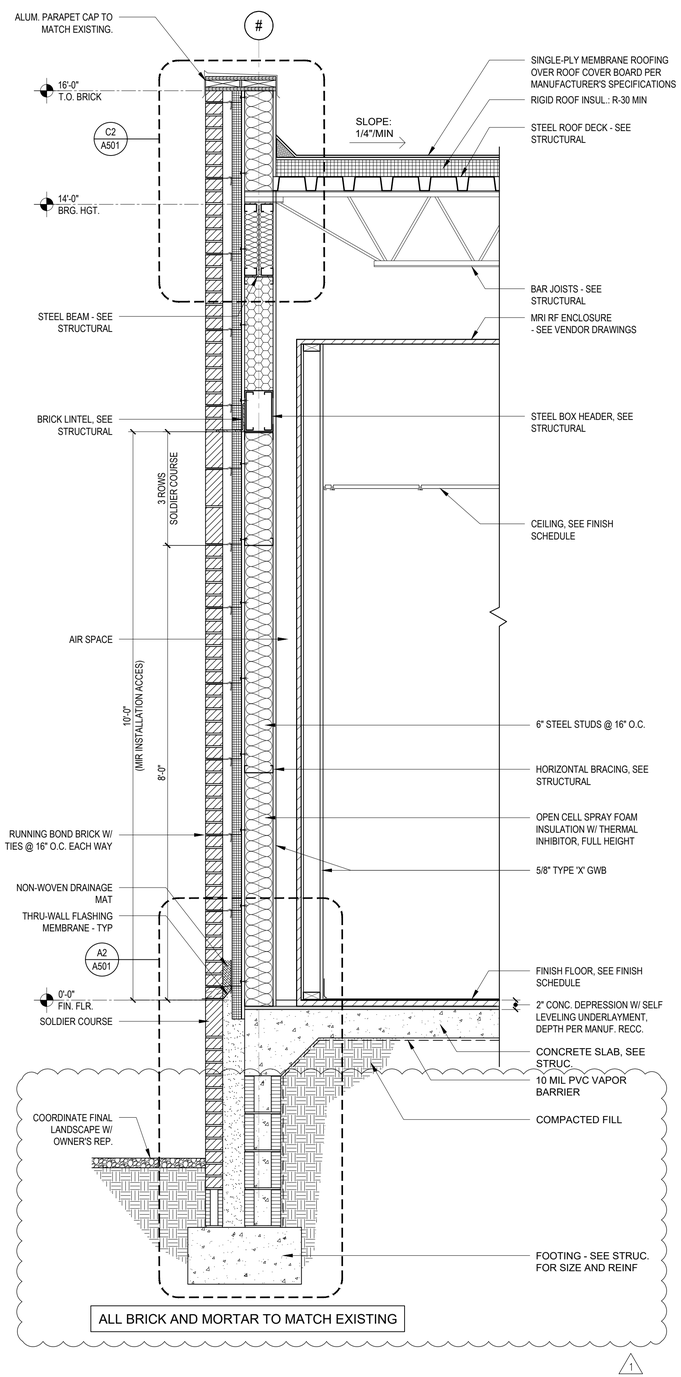

A2	WALL SECTION - TYP.
SCALE: 3/4" = 1'-0"	@ MAGNET ROOM #A120 W/ DEPRESSED SLAB

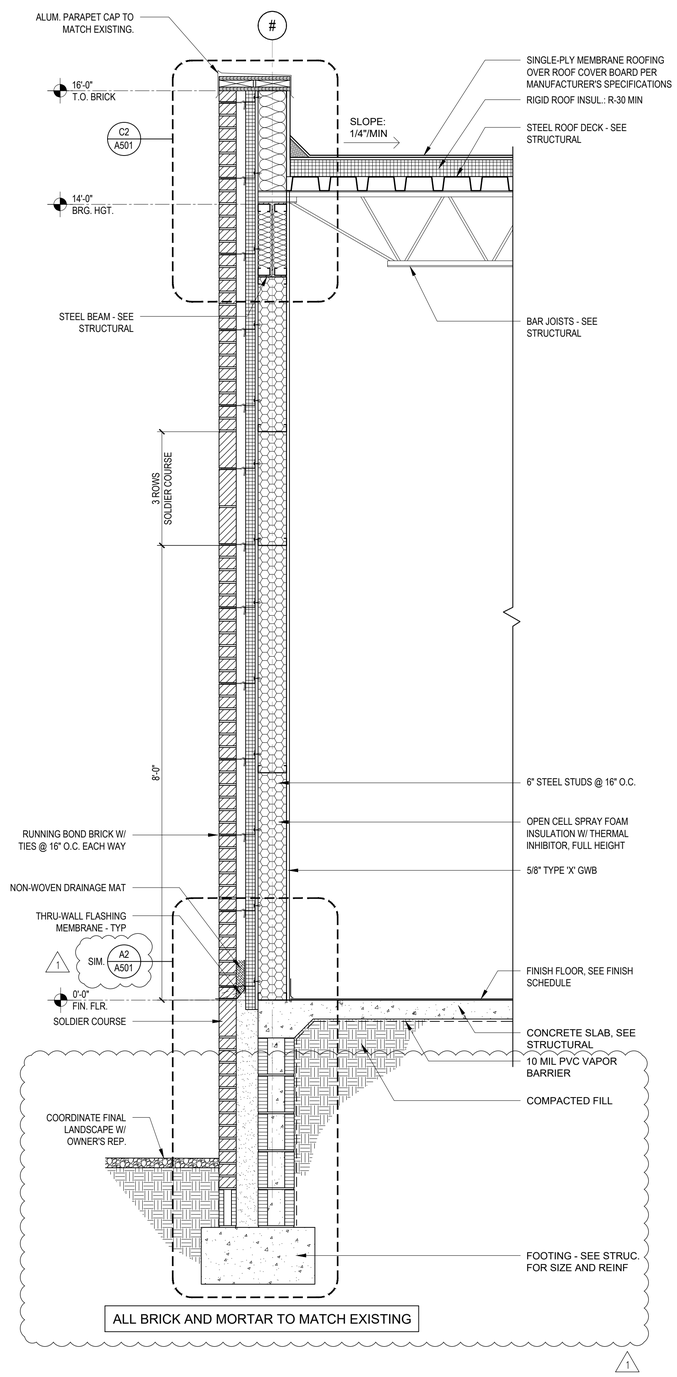

A4	WALL SECTION - TYP
SCALE: 3/4" = 1'-0"	

DAG ARCHITECTS
DAG Architects AR0009694
455 Harrison Ave Suite I Panama City, FL 32401
850.387.1671
www.DAGarchitects.com

BID DOCUMENTS

HCA FLORIDA GULF COAST HOSPITAL
Outpatient Rehabilitation & Diagnostic Center
DIAGNOSTICS MRI ADDITION
2024 STATE STREET, PANAMA CITY, FL 32405

HCA Florida
Gulf Coast Hospital

REVISIONS:

No.	Description	Date
1	ADDENDUM 1	04.22.2025

WALL SECTIONS

PROJECT NUMBER	24107
DATED	03/28/2025

A-311

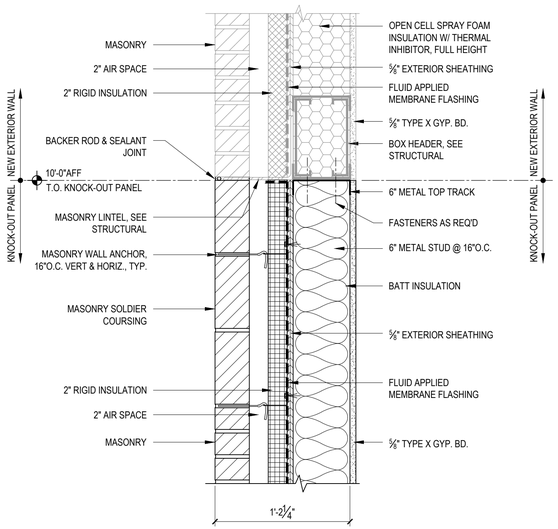

ALL BRICK AND MORTAR TO MATCH EXISTING

C1 KNOCK-OUT PANEL ENLARGED DETAIL

SCALE: 1-1/2"=1'-0" SECTION @ HEAD

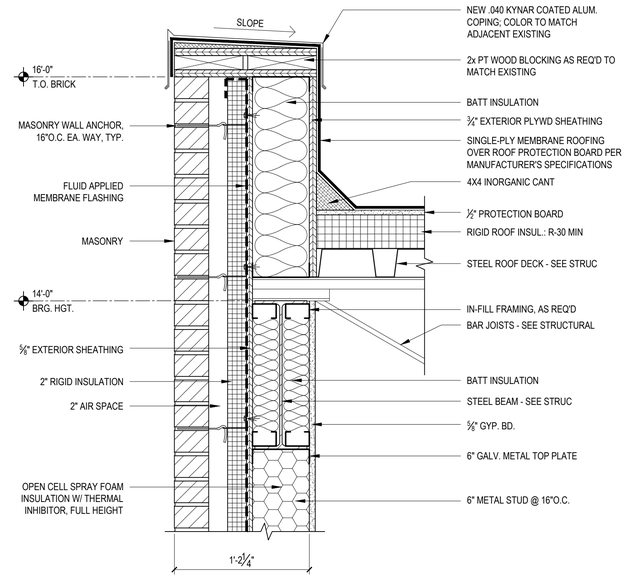

ALL BRICK AND MORTAR TO MATCH EXISTING

C2 TYPICAL ROOF PARAPET

SCALE: 1-1/2"=1'-0"

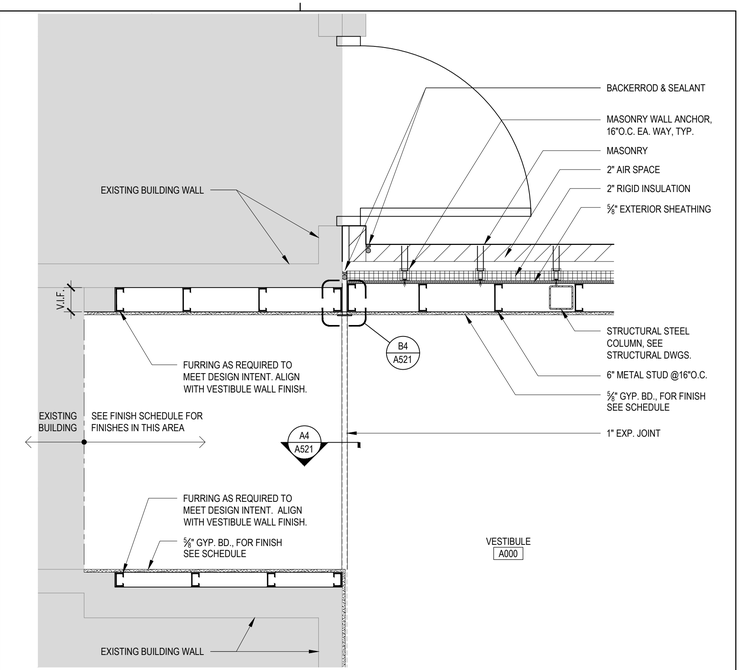

ALL BRICK AND MORTAR TO MATCH EXISTING

C3 VESTIBLUE CONNECTION TO EXISTING BLDG.

SCALE: 3/4"=1'-0" .

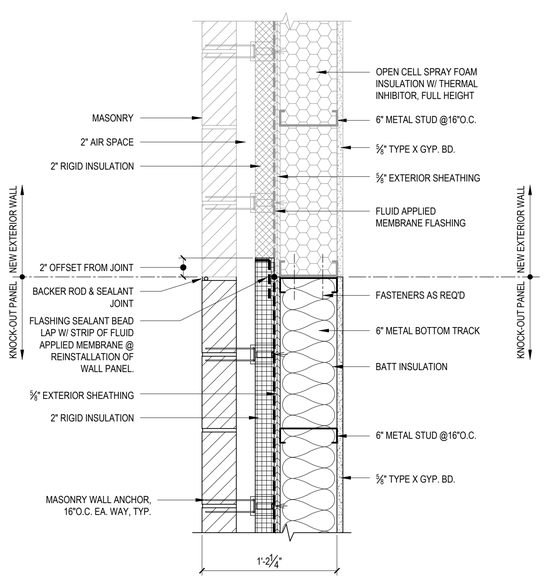

ALL BRICK AND MORTAR TO MATCH EXISTING

A1 KNOCK-OUT PANEL ENLARGED DETAIL

SCALE: 1-1/2"=1'-0" PLAN VIEW

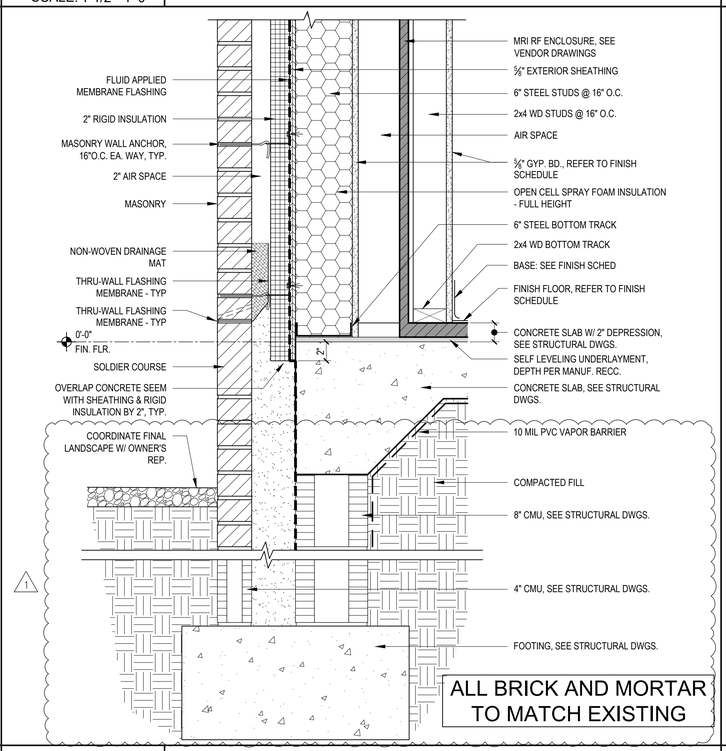

ALL BRICK AND MORTAR TO MATCH EXISTING

A2 TYPICAL WALL FOOTING

SCALE: 1-1/2"=1'-0"

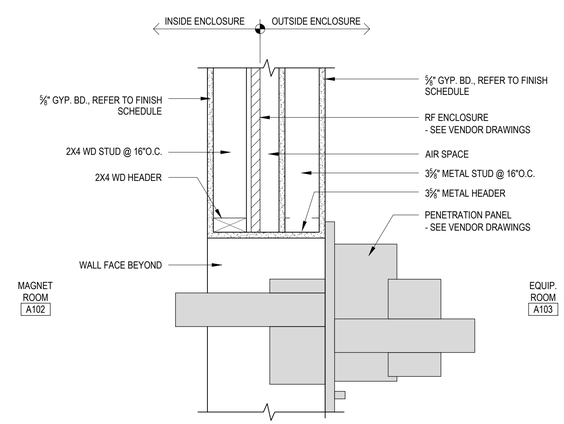

GENERAL NOTE:
USE ONLY NON-FERROUS FASTENERS ON WALL ASSEMBLY, DOOR FRAME, & TRIM FOR ALL CONSTRUCTION WITHIN MAGNET ROOM #120.

A3 PENETRATION PANEL OPENING

SCALE: 1-1/2"=1'-0"

DAG ARCHITECTS
DAG Architects AR0009694
455 Harrison Ave Suite I Panama City, FL 32401
850.387.1671
www.DAGarchitects.com

BID DOCUMENTS

HCA FLORIDA GULF COAST HOSPITAL
Outpatient Rehabilitation & Diagnostic Center
DIAGNOSTICS MRI ADDITION
2024 STATE STREET, PANAMA CITY, FL 32405

HCA Florida
Gulf Coast Hospital

REVISIONS:

No.	Description	Date
1	ADDENDUM 1	04.22.2025

DETAILS

PROJECT NUMBER 24107
DATED 03/28/2025

A-501

24107
BID DOCUMENTS
2025-04-24

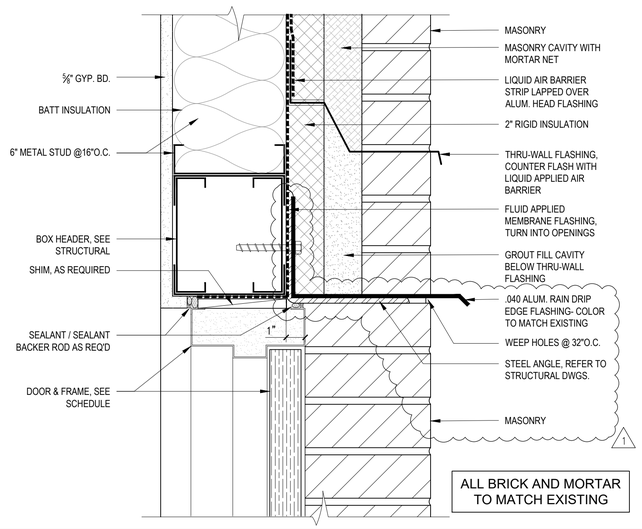

ALL BRICK AND MORTAR TO MATCH EXISTING

C1 HEAD DETAIL
SCALE: 3" = 1'-0" | TYPICAL @ EXTERIOR OPENING

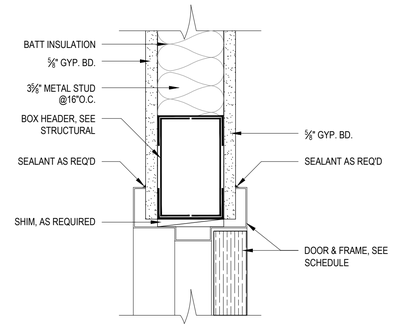

C2 HEAD DETAIL
SCALE: 3" = 1'-0" | TYPICAL @ INTERIOR OPENING

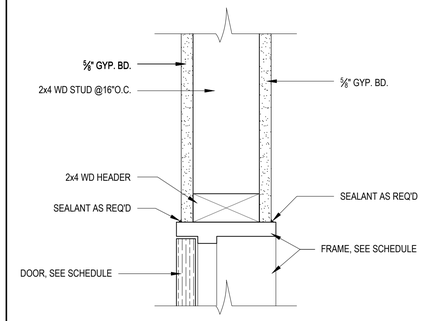

GENERAL NOTE:
USE ONLY NON-FERROUS FASTENERS ON WALL ASSEMBLY, DOOR FRAME, & TRIM FOR ALL CONSTRUCTION WITHIN MAGNET ROOM #120.

C3 HEAD DETAIL
SCALE: 3" = 1'-0" | DOOR #A102A ONLY

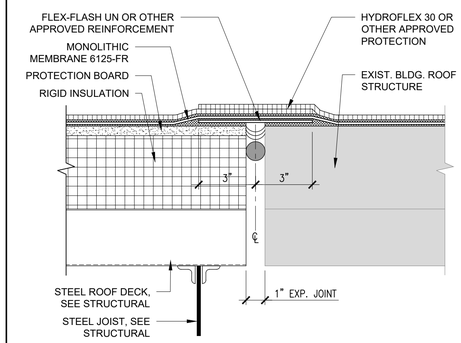

NOTES:
1. DETAIL DESIGNED FOR JOINTS WITH MAX. MOVEMENT ACCOMMODATION FACTOR OF 25%.
2. BACKER ROD AND SEALANT ARE REQUIRED IN JOINT PRIOR TO MM6125/FLEX-FLASH UN INSTALLATION.
3. IN COVERED/BURIED CONDITIONS, MM6125 IS EXTENDED AS CONTINUOUS FLASHING AS HIGH AS THE OVERBURDEN LEVEL. FLASHING MUST BE TERMINATED NO LESS THAN 4" ABOVE SUBSTRATE. IN ADDITION, ADEQUATE PROTECTION MUST BE PROVIDED FOR FLASHING FROM SUBSEQUENT TOPPING/ BACKFILL. (SEE W-6B) WHENEVER POSSIBLE THE EXPANSION JOINT SHOULD BE EXTENDED UP THROUGH ALL TOPPING LAYERS.

C4 EXPANSION JOINT DTL.
SCALE: 3" = 1'-0" | @ ROOF

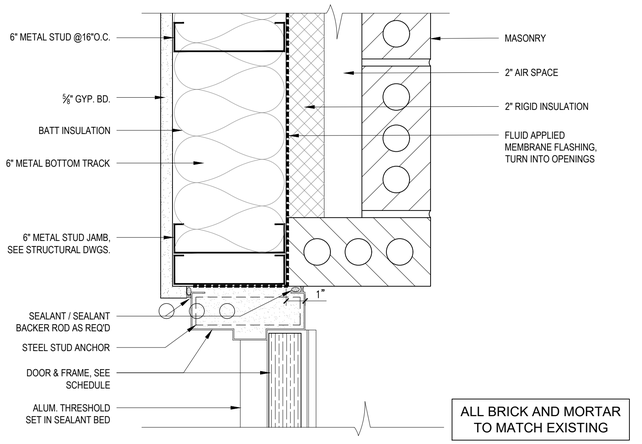

ALL BRICK AND MORTAR TO MATCH EXISTING

B1 JAMB DETAIL
SCALE: 3" = 1'-0" | TYPICAL @ EXTERIOR OPENING

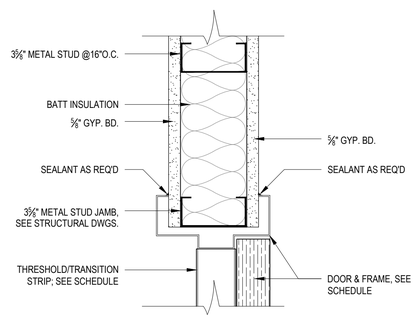

B2 JAMB DETAIL
SCALE: 3" = 1'-0" | TYPICAL @ INTERIOR OPENING

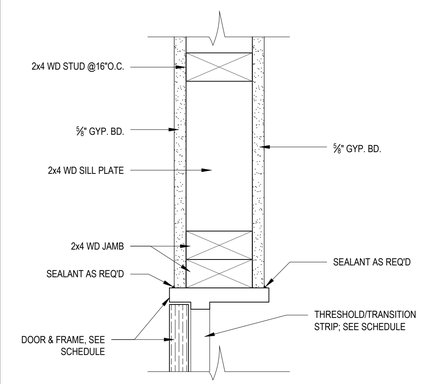

GENERAL NOTE:
USE ONLY NON-FERROUS FASTENERS ON WALL ASSEMBLY, DOOR FRAME, & TRIM FOR ALL CONSTRUCTION WITHIN MAGNET ROOM #120.

B3 JAMB DETAIL
SCALE: 3" = 1'-0" | DOOR #A102A ONLY

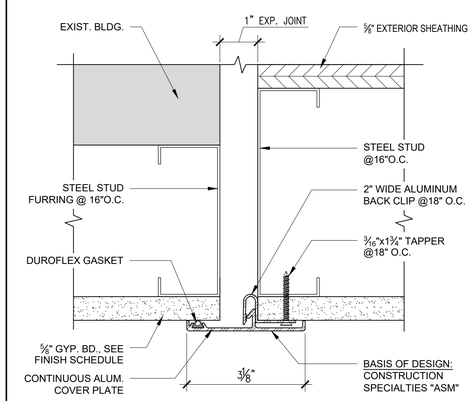

B4 EXPANSION JOINT DTL.
SCALE: 3" = 1'-0" | @ WALL

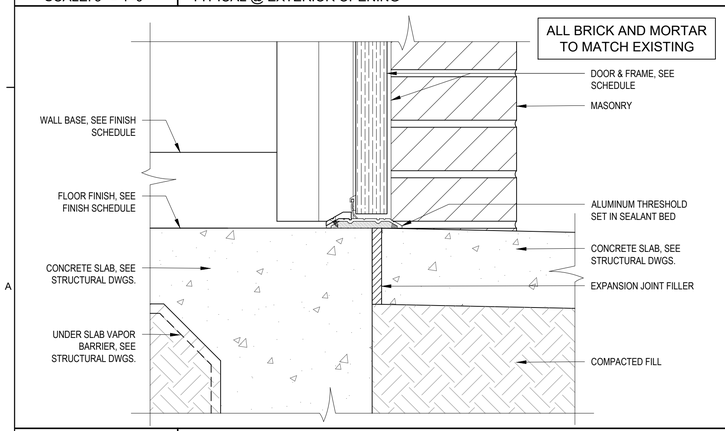

A1 THRESHOLD DETAIL
SCALE: 3" = 1'-0" | TYPICAL @ EXTERIOR OPENING

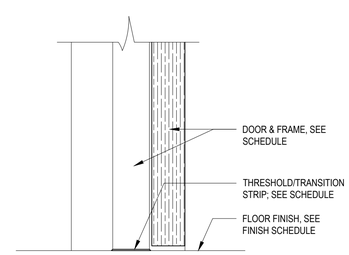

A2 THRESHOLD DETAIL
SCALE: 3" = 1'-0" | TYPICAL @ INTERIOR OPENING

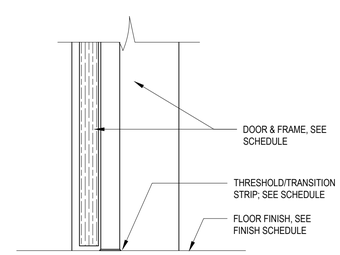

GENERAL NOTE:
USE ONLY NON-FERROUS FASTENERS ON WALL ASSEMBLY, DOOR FRAME, & TRIM FOR ALL CONSTRUCTION WITHIN MAGNET ROOM #120.

A3 THRESHOLD DETAIL
SCALE: 3" = 1'-0" | DOOR #A102A ONLY

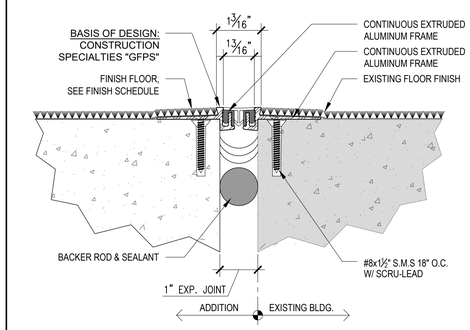

A4 EXPANSION JOINT DTL.
SCALE: 6" = 1'-0" | @ FLOOR

DAG ARCHITECTS
DAG Architects AR0009694
455 Harrison Ave Suite I Panama City, FL 32401
850.387.1671
www.DAGarchitects.com

BID DOCUMENTS

HCA FLORIDA GULF COAST HOSPITAL
Outpatient Rehabilitation & Diagnostic Center
DIAGNOSTICS MRI ADDITION
2024 STATE STREET, PANAMA CITY, FL 32405

HCA Florida
Gulf Coast Hospital

REVISIONS:

No.	Description	Date
1	ADDENDUM 1	04.22.2025

HEAD, SILL, & JAMB DETAILS

PROJECT NUMBER	24107
DATED	03/28/2025

A-521

24107
BID DOCUMENTS
2025-04-24

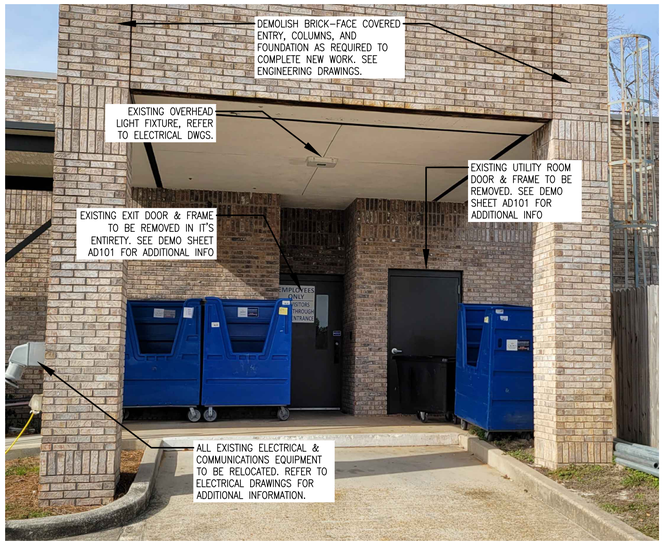

B1	EXISTING 4'-0" EXIT DOOR
SCALE: NTS	.

B2	RAMP DN. FROM EXISTING 4'-0" DOOR
SCALE: NTS	.

B4	RAMP & STOOP
SCALE: NTS	.

A1	.
SCALE: NTS	.

A2	.
SCALE: NTS	.

A4	RAMP & STOOP
SCALE: NTS	.

DAG
ARCHITECTS
DAG Architects AR0009694
455 Harrison Ave Suite I Panama City, FL 32401
850.387.1671
www.DAGarchitects.com

BID DOCUMENTS

HCA FLORIDA GULF COAST HOSPITAL
Outpatient Rehabilitation & Diagnostic Center
DIAGNOSTICS MRI
ADDITION
2024 STATE STREET, PANAMA CITY, FL 32405

HCA Florida
Gulf Coast Hospital

REVISIONS:

No.	Description	Date
1	AHCA REVIEW COMMENTS	2/21/24

PHOTO DETAILS
RAMP & STOOP

PROJECT NUMBER	24107
DATED	03/28/2025

A-531

24107
BID DOCUMENTS
2025-04-25

DOOR SCHEDULE

ROOM #	DOOR DATA: PANEL TYPE	PANEL MATERIAL	DOOR SIZE	FRAME: FRAME TYPE	FRAME MATERIAL	DETAILS: HEAD	JAMB	SILL	DOOR REMARKS
A000	F	HM	4'-0" X 7'-0"	HM2	GHM	C1 / A521	B1 / A521	A1 / A521	
A100	F	SCWD	4'-0" X 7'-0"	HM1	GHM	C2 / A521	B2 / A521	A2 / A521	
A101	F	SCWD	4'-0" X 7'-0"	HM1	GHM	C2 / A521	B2 / A521	A2 / A521	
A102	SEE VENDOR DRAWINGS		4'-0" X 7'-0"	SEE VENDOR DRAWINGS					1, VENDOR PROVIDED
A102A	LV	WD	PR 2'-0" X 7'-0"	WD	WD	C3 / A521	B3 / A521	A3 / A521	
A103	F	SCWD	3'-6" X 7'-0"	HM1	HM	C2 / A521	B2 / A521	A2 / A521	
A104	F	SCWD	3'-0" X 7'-0"	HM1	HM	C2 / A521	B2 / A521	A2 / A521	
A104A	F	SCWD	3'-0" X 7'-0"	HM1	HM	C2 / A521	B2 / A521	A2 / A521	
A105	F	HM	6'-0" X 7'-0"	HM2	GHM	C1 / A521	B1 / A521	A1 / A521	
189	F	HM	3'-0" X 7'-0"	HM2	GHM	EXISTING	EXISTING	EXISTING	

DOOR REMARKS:

1. THE ENTIRE DOOR ASSEMBLY SHALL BE BY THE RF SHEILDING CONTRACTOR

GENERAL NOTES (APPLIES TO ALL)

A. EXTERIOR DOORS TO BE LARGE MISSILE IMPACT-RATED.

B. EXTERIOR DOORS AND FRAMES TO MEET THE WIND LOAD REQUIREMENTS OF THE PROJECT.

C. NOTE DELETED.

THRESHOLD NOTES:

A. 1/2" MAXIMUM TOTAL HEIGHT WITH 1/4" MAXIMUM VERTICAL CHANGE AT EDGE.

B. 1 : 2 SLOPED BEVEL REQUIRED IF LEVEL CHANGE IS OVER 1/4" VERTICAL LEVEL CHANGE.

C. 1/4" MAXIMUM VERTICAL LEVEL CHANGE.

DOOR SCHEDULE GENERAL NOTES

1. DOOR MATERIAL ABBREVIATIONS
   - ALUM ALUMINUM
   - HM HOLLOW METAL
   - GHM GALVANIZED HOLLOW METAL
   - PR PAIR
   - RFS RADIO FREQUENCY SHEILDING CONTRACTOR
   - SCWD SOLID CORE WOOD DOOR
2. GLASS TYPE ABBREVIATIONS
   - TG TEMPERED GLASS
   - SG SINGLE GLASS
   - IG INSULATING GLASS (2 LAYERS GLASS W/ ½" AIR SPACE)
   - XG IMPACT RESISTANT GLASS
   - TMG TRANSPARENT MIRROR GLASS
   - PCG POLYCARBONATE SHEET
3. UNLESS NOTED OTHERWISE ALL DOORS ARE 1-3/4" THICK.
4. DOOR FINISH ABBREVIATIONS
   - STN STAINED
   - PTD PAINTED
   - ANOD ANODIZED
5. COORDINATE WITH OWNER'S REPRESENTATIVE FOR HARDWARE LOCKSET TYPES.
6. EXTERIOR AND WET AREA HOLLOW METAL FRAMES AND DOORS TO BE GALVANIZED.
7. ALL DOORS OFF OF CORRIDORS TO HAVE A CLOSER.

DOOR HARDWARE (VERIFY FINAL SELECTION W/ OWNER'S REP)

BASIS OF DESIGN: SCHLAGE LARGE FORMAT INTERCHANGEABLE CORE (LFIC) LEVER, US26D
- PRIVACY/BATH - LOCK / KEY: DOORS #A104 & 104A
- ACCESS CONTROL - KEY CARD / EGRESS: DOORS #A000, A100, A103
- PASSAGE - DOOR #A101
- STORAGE - PASSAGE W/ DEADBOLT, DOOR #105
- MATCH EXISTING FUNCTION - DOOR #189

C4 DOOR SCHEDULE & NOTES

SCALE: N.T.S.

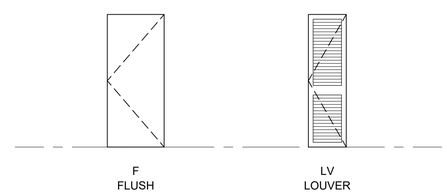

B4 DOOR TYPES

SCALE: 1/4" = 1'-0"

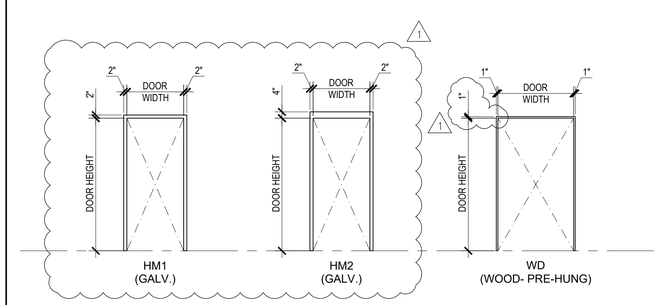

A4 DOOR FRAME TYPES

SCALE: 1/4" = 1'-0"

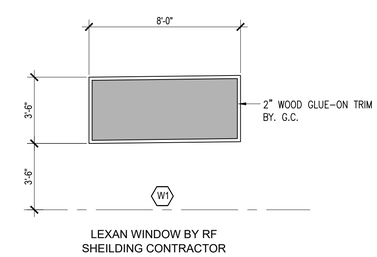

LEXAN WINDOW BY RF SHEILDING CONTRACTOR

A5 WINDOW TYPES

SCALE: 1/4" = 1'-0"

DAG ARCHITECTS

DAG Architects AR0009694
455 Harrison Ave Suite I Panama City, FL 32401
850.387.1671
www.DAGarchitects.com

BID DOCUMENTS

HCA FLORIDA GULF COAST HOSPITAL
Outpatient Rehabilitation & Diagnostic Center
DIAGNOSTICS MRI ADDITION
2024 STATE STREET, PANAMA CITY, FL 32405

HCA Florida
Gulf Coast Hospital

REVISIONS:

No.	Description	Date
1	ADDENDUM 1	04.22.2025

DOOR SCHEDULE, DOOR & WINDOW TYPES

PROJECT NUMBER 24107
DATED 03/28/2025

A-601

22017
CONSTRUCTION DWGS
2025-04-25

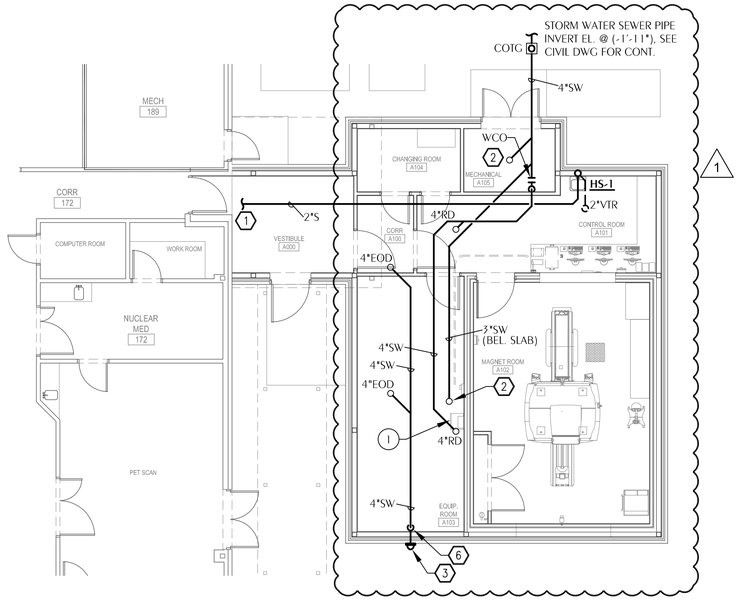

1 PLUMBING SANITARY FLOOR PLAN
P-101 SCALE: 1/8" = 1'-0"

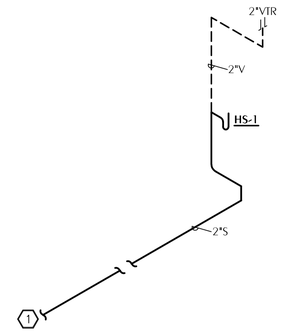

3 PLUMBING SANITARY RISER DIAGRAM
P-101 SCALE: NONE

SHEET NOTES

1. CONNECT TO EXISTING SYSTEMS AS APPROPRIATE. VERIFY EXISTING CONDITIONS BEFORE ROUGH-IN.
2. 3" OPEN HUB DRAIN 1" ABOVE FINISH FLOOR. PROVIDE WITH WATTS BV-1003 BACKWATER VALVE.
3. 4" DOWNSPOUT NOZZLE EQUAL TO IOSAM 25010 - APPROX. 8"ABOVE FINISH GRADE COORDINATE EXACT LOCATION WITH ARCHITECT PRIOR TO ROUGH-IN.
4. PROVIDE DUAL-CHECK VALVE TYPE BACKFLOW PREVENTER PRIOR TO CONNECTION TO MRI COOLING EQUIPMENT.
5. COORDINATE EXACT LOCATION WITH GE EQUIPMENT & ARCHITECT BEFORE ROUGH-IN.
6. 4"SW DOWN THROUGH FLOOR SLAB.

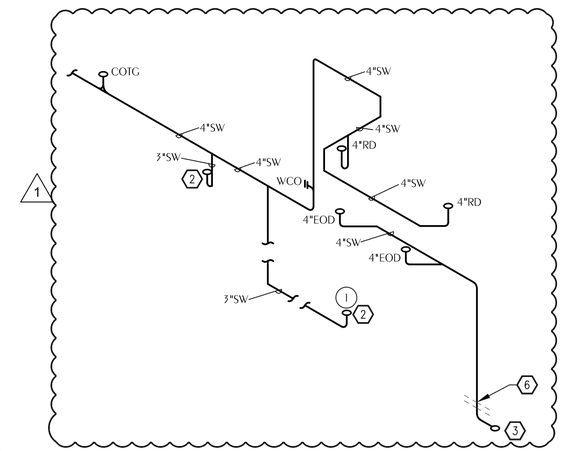

4 PLUMBING STORM WATER RISER DIAGRAM
P-101 SCALE: NONE

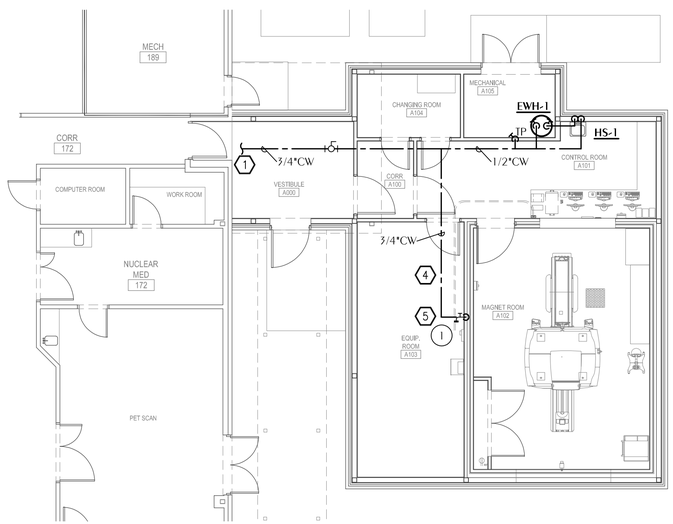

2 PLUMBING DOMESTIC WATER FLOOR PLAN
P-101 SCALE: 1/8" = 1'-0"

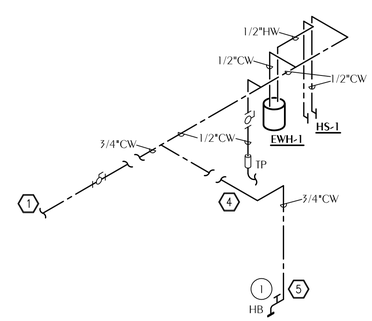

5 PLUMBING DOMESTIC WATER RISER DIAGRAM
P-101 SCALE: NONE

REFERENCE:
FINISHED FLOOR ELEVATION = 0'-0"

WATFORD ENGINEERING
4452 Clinton Street Marianna, Florida 32446
2449 Moores Mill Rd, Suite 100 Auburn, AL 36830
Florida CA Number: 27825
Keith A. Johnson, PE
Florida License Number: 86457
850.526.3447 / 334.209.0212
Project Number: 2025-015
Checked By: KAJ
Drawn By: JDD

DAG ARCHITECTS
DAG Architects AR0009694
455 Harrison Ave Suite 1 Panama City, FL 32401
850.387.1671
www.DAGarchitects.com

BID DOCUMENTS

HCA FLORIDA GULF COAST HOSPITAL
Outpatient Rehabilitation & Diagnostic Center
DIAGNOSTICS MRI ADDITION
2024 STATE STREET, PANAMA CITY, FL 32405

HCA Florida
Gulf Coast Hospital

REVISIONS:

No.	Description	Date
1	ADDENDUM 1	04/22/2025

PLUMBING FLOOR PLAN AND RISER DIAGRAMS

PROJECT NUMBER	24107
DATED	03/28/2025

P-101

LEGEND

AHU-1	EQUIPMENT TAG
1 / M3	DETAIL TAG (*1* INDICATES IDENTIFICATION NUMBER; *M3* INDICATES THE SHEET NUMBER DRAWN ON)
1	SHEET NOTE
	SUPPLY DUCT SECTION POSITIVE PRESSURE
	RETURN OR EXHAUST DUCT NEGATIVE PRESSURE
AxB / AxB	RECTANGULAR DUCT SIZE (*A* INDICATES SIDE SHOWN; *B* INDICATES SIDE NOT SHOWN)
A/B	INDICATES RISE IN ELEVATION OF DUCT.
AØ / AØ	ROUND DUCT SIZE
	EXTERNALLY INSULATED DUCTWORK OR DUCT BOARD
	EXTERNALLY INSULATED ROUND FLEXIBLE DUCTWORK
	DUCT ELBOW WITH TURNING VANES
	RADIUSED DUCT ELBOW
	FLEXIBLE DUCT CONNECTION
	MANUAL VOLUME BALANCING DAMPER
M / M	MOTORIZED DAMPER
FD / FD	FIRE DAMPER WITH ACCESS DOORS
SD / SD	SMOKE DAMPER WITH ACCESS DOORS
BD / BD	BACKDRAFT DAMPER
	TEE WITH TURNING VANES
	TRANSITION
	FLEX DUCT TAKE OFF WITH MVD SIZE EQUALS DIFFUSER NECK SIZE UNLESS NOTED OTHERWISE
	BRANCH DUCT TAKEOFF WITH MVD
SR-1 / 100	AIR DEVICE TAG. TOP LINE INDICATES TYPE OF DEVICE BOTTOM LINE INDICATES AIRFLOW IN CFM
(2)SR-1 / 100	AIR DEVICE TAG. TOP LINE INDICATES TYPE OF DEVICE BOTTOM LINE INDICATES AIRFLOW IN CFM (2) INDICATES TYPICAL OF TWO DEVICES
TYP	TYPICAL
TEMP	TEMPERATURE
SA	SUPPLY AIR
RA	RETURN AIR
EA	EXHAUST AIR
MA	MIXED AIR
OA	OUTDOOR AIR
TA	TRANSFER AIR
EF	EXHAUST FAN
CD	CEILING DIFFUSER
RG	RETURN GRILLE
EG	EXHAUST GRILLE
ER	EXHAUST REGISTER
CREF	CEILING ROOF EXHAUST FAN
AHU	INDOOR AIR HANDLING UNIT
BF	INLINE BOOSTER FAN
T1	THERMOSTAT, *1* INDICATES UNIT CONTROLLED
S	DUCT MOUNTED SMOKE DETECTOR
FD	FLOOR DRAIN
UC	UNDERCUT DOOR ¾*
DG	DOOR GRILLE, REFER TO DOOR SCHEDULE
AFF	ABOVE FINISHED FLOOR
FD	HORIZONTAL FIRE DAMPER
XFR	TRANSFER AIR
ESP	EXTERNAL STATIC PRESSURE
TAB	TESTING, ADJUSTING AND BALANCING
NOM	NOMINAL
VFD	VARIABLE FREQUENCY DRIVE
(F)	FUTURE
EUH	ELECTRIC UNIT HEATER
HP	HEAT PUMP
WM	WALL MOUNTED AIR HANDLER
MHP	MINI HEAT PUMP

GENERAL NOTES

1. ALL DUCT DIMENSIONS ARE NET INSIDE.
2. VERIFY COLLAR SIZES ON ALL AIR TERMINALS, EQUIPMENT OUTLETS AND INLETS, TRANSITION DUCTWORK AS NECESSARY. EXTERNALLY INSULATE TRANSITIONS AT EQUIPMENT CONNECTIONS.
3. FIELD VERIFY CLEAR SPACE AVAILABLE, ROUTING PATH, AND CONFLICTS WITH STRUCTURE AND THE WORK OF OTHER TRADES PRIOR TO FABRICATING DUCTWORK. PROVIDE OFFSETS IN DUCTWORK AS REQUIRED, WHETHER SPECIFICALLY INDICATED ON DRAWINGS OR NOT. SUBMIT SHOP DRAWINGS ON DUCTWORK LAYOUT PRIOR TO COMMENCING WORK. MAINTAIN CLEARANCE AROUND ALL LIGHT FIXTURES AS REQUIRED TO REMOVE AND SERVICE FIXTURES. COORDINATE WITH ROOF TRUSSES/STRUCTURE. PRESSURE TEST ALL NEW DUCTWORK FOR LEAKS. SEE SPECIFICATIONS.
4. CONTRACTOR SHALL INSTALL ALL EQUIPMENT, PIPING, AND DUCTWORK SUCH THAT MANUFACTURERS' RECOMMENDED CLEARANCES ARE MET FOR ALL ACCESS PANELS, MOTORS, FANS, BELTS, FILTERS AND AIR INTAKES. CONDENSATE LINES SHALL BE CLEAR OF FILTER RACK ACCESS.
5. PROVIDE DUCT FLEX CONNECTIONS & VIBRATION ISOLATION FOR ALL UNITS NOT INTERNALLY ISOLATED.
6. ALL SUPPLY, RETURN, EXHAUST AND OUTSIDE AIR INTAKE DUCTWORK SHALL BE GALVANIZED SHEET METAL.
7. ALL AHU AND OAU FILTERS SHALL BE OF A READILY AVAILABLE SIZE, OF DISPOSABLE TYPE, AND BE ACCESSIBLE WITHOUT THE USE OF SCREWS OR OTHER MECHANICAL DEVICES REQUIRING TOOLS.
8. PROVIDE ACCESS PANELS IN CEILINGS AS REQUIRED FOR MAINTENANCE AND ADJUSTMENT OF EQUIPMENT LOCATED ABOVE CEILING. COORDINATE ALL SIZES AND LOCATIONS WITH ARCHITECT DURING SUBMITTALS. PROVIDE PLANS IF REQUIRED BY ARCHITECT.
9. CONTRACTOR IS RESPONSIBLE FOR FIELD VERIFYING LOCATION OF ALL EQUIPMENT AND UTILITIES.
10. CONTRACTOR SHALL SUBMIT COORDINATED DUCTWORK SHOP DRAWINGS INDICATING COORDINATION WITH ELECTRICAL, PLUMBING, AND FIRE PROTECTION, PRIOR TO BEGINNING WORK. SHOP DRAWINGS SHALL INCLUDE LOCATIONS OF THERMOSTATS, ACCESS PANELS, AIR DEVICES, DUCTWORK, ETC.
11. ALL WORK SHALL COMPLY WITH 2023 FLORIDA BUILDING CODE (8TH EDITION), 2023 FLORIDA FIRE PREVENTION CODE, AND 2022 FGI GUIDELINES FOR DESIGN AND CONSTRUCTION OF HOSPITALS.
12. (1) A CONTRACTOR CERTIFIED IN AABC OR NEBB SHALL PERFORM TESTING AND BALANCING UPON COMPLETION OF WORK. TAB SCOPE SHALL ALL NEW HVAC EQUIPMENT AND AIR DEVICES. TAB REPORT SHALL BE SUBMITTED TO ENGINEER OF RECORD FOR REVIEW AND APPROVAL.
13. REFER TO GE HEALTHCARE AND UNIVERSAL SHIELDING CORP. DRAWINGS FOR ADDITIONAL REQUIREMENTS.

DUCTWORK NOTES

1. ALL ROUND FLEXIBLE DUCT SHALL BE FLEXMASTER TYPE 8M OR ENGINEER APPROVED EQUAL. MAXIMUM LENGTH OF ANY FLEXIBLE DUCT RUNOUT SHALL BE 5'-0". WHERE LENGTH REQUIRED EXCEEDS 5'-0", INSTALL EXTERNALLY INSULATED ROUND SNAPLOCK DUCT FOR BALANCE OF DISTANCE TO SPIN-IN TAP AT MAIN DUCT TRUNK.
2. SEAL ALL DUCT PENETRATIONS OF WALLS AND FLOORS AIRTIGHT, REGARDLESS OF WHETHER WALLS AND FLOORS ARE FIRE RATED OR NOT.
3. UNLESS OTHERWISE INDICATED, ALL SUPPLY AIR DUCTWORK UPSTREAM OF TERMINAL UNITS SHALL BE OVAL OR ROUND, SMACNA STATIC PRESSURE CLASS 3" W.G., SEAL CLASS A, SPIRAL. DUCT SIZES INDICATED ARE INSIDE CLEAR DIMENSIONS.
4. ALL SUPPLY AIR DUCTWORK DOWNSTREAM OF TERMINAL UNITS (EXCEPT TAKEOFFS TO SUPPLY AIR DIFFUSERS) SHALL BE LOW PRESSURE RECTANGULAR, SMACNA STATIC PRESSURE CLASS 2" W.G., SEAL CLASS A, EXTERNALLY INSULATED. DUCT SIZES INDICATED ARE INSIDE CLEAR DIMENSIONS.
5. ALL RETURN AIR DUCTWORK SHALL BE LOW PRESSURE RECTANGULAR, SMACNA STATIC PRESSURE CLASS 2" W.G., SEAL CLASS A, EXTERNALLY INSULATED. DUCT SIZES INDICATED ARE INSIDE CLEAR DIMENSIONS. PROVIDE ACOUSTICAL DUCT LINER WHERE INDICATED.
6. ALL OUTSIDE AIR INTAKE DUCTWORK SHALL BE LOW PRESSURE RECTANGULAR, SMACNA STATIC PRESSURE CLASS 2" W.G., SEAL CLASS A, EXTERNALLY INSULATED. DUCT SIZES INDICATED ARE INSIDE CLEAR DIMENSIONS.
7. STANDARD EXHAUST AIR DUCTWORK SHALL BE LOW PRESSURE RECTANGULAR, SMACNA STATIC PRESSURE CLASS 1/2" W.G., SEAL CLASS A, INSULATION NOT REQUIRED.
8. AVOID ROUTING DUCTWORK AND TU'S WITHIN 6" OF TOP OF LIGHT FIXTURES WHEREVER POSSIBLE. MAINTAIN CLEARANCE BETWEEN TU'S AND DUCT INSULATION TO TOP OF LIGHTS. PROVIDE CLEARANCE ALL AROUND AIR TERMINAL UNITS AS REQUIRED FOR ROUTINE MAINTENANCE.
9. PROVIDE MVD'S AT ALL TAKEOFFS FROM MAIN DUCTS.
10. PROVIDE DUCT ACCESS PANELS AT ALL SMOKE DETECTORS AND MOTORIZED DAMPERS.

PIPING GENERAL NOTES

1. COORDINATE ALL PIPING AND ACCESSORIES WITH GE DRAWINGS AND UNIVERSAL SHIELDING CORP DRAWINGS.
2. UNDERGROUND CHILLED WATER PIPING SHALL BE FACTORY FABRICATED PREINSULATED TYPE K COPPER CARRIER PIPE WITH MINIMUM 2" THICK POLYURETHANE FOAM INSULATION AND 125 MIL THICK HDPE JACKET. COPPER-THERM BY THERMACOR OR APPROVED EQUAL.
3. ABOVE GRADE CHILLED WATER PIPING SHALL BE TYPE K COPPER, INSULATED WITH 2" THICK CELLULAR GLASS INSULATION COMPLYING WITH ASTM C552, TYPE II, CLASS 1. PROVIDE WITH ASTM C921 TYPE 1 VAPOR BARRIER. COVER ALL INSULATION WITH PVC JACKET.
4. (1) PROVIDE SHUTOFF VALVES AS PIPING ENTERS BUILDING AND AT CONNECTION TO ICC. COORDINATE EXACT REQUIREMENTS WITH GE.

HVAC COMMISSIONING REQUIREMENTS

1. THIS PROJECT WILL BE INDEPENDENTLY COMMISSIONED. CONTRACTOR SHALL PERFORM ALL TESTING AND DEMONSTRATE SYSTEM OPERATION TO SUPPORT THE COMMISSIONING AUTHORITY. FURNISH LABOR AND MATERIALS TO SUPPORT COMPLETE HVAC COMMISSIONING.
2. COORDINATE AND DIRECT TRAINING TO PERSONNEL FOR OPERATION AND MAINTENANCE OF HVAC EQUIPMENT AND SYSTEMS.
3. THE CONTRACTOR SHALL PROVIDE STARTUPS REPORTS AND OPERATION AND MAINTENANCE MANUALS TO THE COMMISSIONING AUTHORITY PRIOR TO COMMISSIONING.
4. THE CONTRACTOR SHALL DEMONSTRATE SYSTEM AND EQUIPMENT OPERATION.
5. THE TEST AND BALANCE CONTRACTOR SHALL WORK WITH THE COMMISSIONING AUTHORITY FOR TAB VERIFICATION.

LOUVER SCHEDULE

MARK	AIRFLOW CFM (MAX)	LOUVER SIZE (WxH) INCHES	FREE AREA FT^2 (MIN)	PRESSURE DROP IN. WG (MAX)
LVR-1 / CFM	240	12x12	0.29	0.10

1. PROVIDE RUSKIN EME3625MD (OR EQUAL) EXTRUDED ALUMINUM, WIND-DRIVEN RAIN RESISTANT, STATIONARY LOUVER WITH BIRDSCREEN AND FLORIDA PRODUCT APPROVAL.
2. FINISH TO BE SELECTED BY ARCHITECT FROM MANUFACTURER'S STANDARD COLORS.
3. REFER TO ARCHITECTURAL PLANS FOR MOUNTING HEIGHTS.
4. PROVIDE BASIS OF DESIGN OR APPROVED EQUAL BY GREENHECK OR NAILOR.

VENTILATION SCHEDULE

SPACE TYPE	OUTSIDE AIR ACH	TOTAL ACH
CLASS 1 IMAGING	2	6

NOTE:
VENTILATION AIR HAS BEEN CALCULATED IN COMPLIANCE WITH ASHRAE STANDARD 62.1-2019 INDOOR AIR QUALITY METHOD.

SPLIT SYSTEM HEAT PUMP SCHEDULE

UNIT AHU/HP	BASIS OF DESIGN	MODEL HP/AHU	SA (CFM)	OA (CFM)	ESP (IN.H2O)	FAN (HP)	COOLING MAT° (DB/WB)	COOLING OAT° (DB/WB)	COOLING TOTAL (BTUH)	COOLING SENSIBLE (BTUH)	COOLING SEER2	HEATING MAT ° (DB)	HEATING OAT ° (DB)	HEATING TOTAL (BTUH)	HSPF2	SUPPL. HEAT	AHU ELECTRICAL VOLTS/PHASE	AHU ELECTRICAL MCA	AHU ELECTRICAL MOP	HP ELECTRICAL VOLTS/PHASE	HP ELECTRICAL MCA	HP ELECTRICAL MOP	NOTES
4	TRANE	5TWA4042A/BCVE048	1300	190	0.4	0.5	72.0/61.0	95/77	35800	28300	14.3	60.9	25	20000	7.5	7kW	208/3	37.7	40.0	208/3	18.1	30	1,2,3,4,5,6,7,8,9,10,11

1. PROVIDE 2 " 30% FILTERS AND FILTER HOUSING SHOWN IN DETAILS.
2. EFFICIENCIES IN ACCORDANCE WITH ARI STANDARD 210/240.
3. ESP DOES NOT INCLUDE FILTER, CASING, ETC.
4. PROVIDE CONTROL KIT TO INCLUDE BLOWER CONTACTOR OR STARTER, TRANSFORMER, ELECTRIC HEATER INTLERLOCKS. ELECTRICAL SERVICE SHALL BE A SINGLE POINT OF CONNECTION.
5. PROVIDE THERMAL EXPANSION VALVES.
6. DIRECT DRIVE AHU FAN.
7. COOLING CAPACITY IS NET AND DOES NOT INCLUDE FAN HEAT.
8. PROVIDE UNIT MOUNTED CIRCUIT BREAKER FOR INDOOR AIR HANDLERS.
9. COP LISTED IS AT 47°F.
10. PROVIDE UNIT WITH HOT GAS REHEAT.
11. PROVIDE BASIS OF DESIGN OR APPROVED EQUAL BY CARRIER, DAIKIN OR YORK.

WATFORD ENGINEERING
4452 Clinton Street Marianna, Florida 32446
2449 Moores Mill Rd, Suite 100 Auburn, AL 36830
Florida CA Number: 27825
Keith A. Johnson, PE
Florida License Number: 86457
850.526.3447 / 334.209.0212
Project Number: 2025-015
Checked By: KAJ
Drawn By: JFG

DAG ARCHITECTS
DAG Architects AR0009694
455 Harrison Ave Suite 1 Panama City, FL 32401
850.387.1671
www.DAGarchitects.com

BID DOCUMENTS

HCA FLORIDA GULF COAST HOSPITAL
Outpatient Rehabilitation & Diagnostic Center
DIAGNOSTICS MRI ADDITION
2024 STATE STREET, PANAMA CITY, FL 32405

HCA Florida Gulf Coast Hospital

REVISIONS:

No.	Description	Date
1	ADDENDUM 1	04/21/2025

HVAC LEGEND, NOTES, AND SCHEDULES

PROJECT NUMBER	24107
DATED	03/28/2025

M-001

22017
CONSTRUCTION DWGS
2025-04-22

MINI SPLIT SYSTEM AIR HANDLING UNIT SCHEDULE

UNIT	BASIS OF DESIGN	MODEL	TYPE	NOMINAL COOL CAPACITY (BTUH)	DESIGN COOLING EAT °F DB/WB	DESIGN COOLING CAPACITY (BTUH)		NOMINAL HEAT CAPACITY (BTUH)	DESIGN HEATING TOTAL CAPACITY (BTUH)	DESIGN HEATING EAT °F DB	AIRFLOW (CFM)	VOLTS/PHASE	FAN (WATTS)	FAN FLA (AMPS)	NOTES
						COOLING TOTAL	COOLING SENSIBLE								
WM-1.1	MITSUBISHI	PKA-A24KA8	WALL MOUNT	24000	72.8/60.3	24000	24000	15700	3200	68.9	700	FED FROM MHP	69	0.27	1,2,3,4,5,6,7,8,9,10,11
WM-2.1	MITSUBISHI	PKA-A30KA8	WALL MOUNT	30000	72.8/60.3	24800	23500	18300	3200	68.9	775	FED FROM MHP	69	0.27	1,2,3,4,5,6,7,8,9,10,11

1. NOMINAL COOLING CAPACITIES ARE BASED ON INDOOR COIL EAT OF 80/67°F (DB/WB), OUTDOOR OF 95°F (DB)
2. NOMINAL HEATING CAPACITIES ARE BASED ON INDOOR COIL EAT OF 70°F (DB), OUTDOOR OF 43°(WB)
3. DESIGN COOLING CONDITIONS ARE AT 95°F AMBIENT; DESIGN HEATING CONDITIONS ARE AT 26°F AMBIENT
4. DESIGN CAPACITY IS NET CAPACITY FOR INSTALLATION ACCOUNTING FOR 65 FT PIPE RUN LENGTHS, ETC.
5. CALCULATE REFRIGERANT LINE SIZES BASED UPON FINAL FIELD PIPING LAYOUT.
6. EXPOSED (INDOOR OR OUTDOOR) REF PIPING SHALL BE HARD DRAWN COPPER.
7. PROVIDE HARD WIRED REMOTE THERMOSTAT.
8. PROVIDE CONDENSATE PUMP.
9. PROVIDE DISCONNECT.
10. PROVIDE EPA APPROVED REFRIGERANT AND FACTORY INSTALLED REFRIGERANT MONITORING SYSTEM.
11. PROVIDE BACnet MODULE.

1

MINI SPLIT SYSTEM CONDENSING UNIT SCHEDULE

UNIT	BASIS OF DESIGN	MODEL	NOMINAL COOL CAPACITY (BTUH)	DESIGN COOLING OUTDOOR TEMP DB	SEER2	NOMINAL HEAT CAPACITY (BTUH)	DESIGN HEATING OUTDOOR TEMP DB	HSPF2	VOLTS/PHASE	MCA (AMPS)	MOP (AMPS)	NOTES
MHP-1	MITSUBISHI	PUZ-A24NHA7	24000	95	21.3	15700	25	9.3	208/1	19.0	26	1,2,3
MHP-2	MITSUBISHI	PUZ-A30NHA7	30000	95	20.0	21000	25	8.8	208/1	19.0	26	1,2,3

1. NOMINAL COOLING CAPACITIES ARE BASED ON INDOOR COIL EAT OF 80/67°F (DB/WB), OUTDOOR OF 95°F (DB)
2. NOMINAL HEATING CAPACITIES ARE BASED ON INDOOR COIL EAT OF 70°F (DB), OUTDOOR OF 43°(WB)
3. EFFICIENCY VALUES FOR EER, IEER, AND COP ARE BASED ON AHRI 1230 TEST METHOD FOR MIXTURE OF DUCTED AND NON-DUCTED INDOOR UNITS.

AIR DEVICE SCHEDULE

MARK	MAX AIRFLOW CFM	AIR DEVICE SIZE	DUCT CONNECTION SIZE	TITUS MODEL
CD-1 / CFM	80	9x9	6Ø	TDC
CD-2 / CFM	245	12x12	8Ø	TDC
CD-3 / CFM	245	12x12	8Ø	OMNI-AA
RG,EG,SG,TG,RR,ER				
xx-1 / CFM	450	12x12	12x12	350FL
xx-2 / CFM	600	14x14	12x12	50F-NT
xx-3 / CFM	1540	22X22	20x20	50F-NT

NOTES:
1. MAX NC=20
2. PROVIDE 2x2 LAY IN PANEL FOR AIR DEVICES IN LAY IN CEILINGS.
3. PROVIDE BEVELED MOUNTING FRAME FOR CEILING DIFFUSERS IN HARD CEILINGS.
4. PROVIDE FLAT MOUNTING FRAME FOR GRILLES LOCATED IN HARD CEILINGS.

FAN SCHEDULE

UNIT	TYPE	CFM	MAX. FAN RPM	ESP (IN. H20)	MAX. MOTOR POWER	SONES/db (MAX.)	BASIS OF DESIGN	MODEL	CONTROL	ELECTRICAL VOLTS/PHASE	NOTES
EF-1	INLINE	190	1200	0.25	1/6 HP	2.0	COOK	100SQN12D-	INTERLOCK W/ AHU-1 OA DAMPER	115/1	1,2,3,4,5,10
EF-2	ROOF	1500	1028	0.5	1/3 HP	9.6	COOK	150V17D	INTERLOCK W/ WALL SWITCH	115/1	1,2,3,4,5,6,7,8,9,10

1. PROVIDE DISCONNECT.
2. PROVIDE SOLID STATE SPEED CONTROLLER.
3. PROVIDE BACK DRAFT DAMPER.
4. PROVIDE THERMAL OVERLOAD.
5. PROVIDE DIRECT DRIVE FAN.
6. PROVIDE UPBLAST FAN WITH FLORIDA PRODUCT APPROVAL.
7. PROVIDE ROOF CURB.
8. PROVIDE ALUMINUM BIRDSCREEN.
9. PROVIDE TWO WALL SWITCHES AS LOCATED ON DRAWINGS. SWITCHES SHALL BE CONNECTED IN PARALLEL.
10. PROVIDE BASIS OF DESIGN OR APPROVED EQUAL BY GREENHECK OR ACME FAN.

WATFORD ENGINEERING
4452 Clinton Street Marianna, Florida 32446
2449 Moores Mill Rd, Suite 100 Auburn, AL 36830
Florida CA Number: 27825
Keith A. Johnson, PE
Florida License Number: 86457
850.526.3447 / 334.209.0212
Project Number: 2025-015
Checked By: KAJ
Drawn By: JFG

DAG ARCHITECTS
DAG Architects AR0009694
455 Harrison Ave Suite 1 Panama City, FL 32401
850.387.1671
www.DAGarchitects.com

BID DOCUMENTS

HCA FLORIDA GULF COAST HOSPITAL
Outpatient Rehabilitation & Diagnostic Center
DIAGNOSTICS MRI
ADDITION
2024 STATE STREET, PANAMA CITY, FL 32405

HCA Florida
Gulf Coast Hospital

REVISIONS:

No.	Description	Date
1	ADDENDUM 1	04/21/2025

HVAC SCHEDULE

PROJECT NUMBER	24107
DATED	03/28/2025

M-002

22017
CONSTRUCTION DWGS
2025-04-22

SHEET NOTES

1. COORDINATE FINAL LOCATION WITH EXISTING EQUIPMENT CLEARANCE REQUIREMENTS.
2. TRANSITION TO MRI COMPLIANT DUCTWORK WITHIN MAGNET ROOM BY MARSHIELD OR APPROVED VENDOR.
3. CRYOGENIC VENT TO ROOF AS DETAILED BY M4 - CRYOGENICS (1) ON PAGE 17 OF GE DRAWINGS. VENT SHALL BE AL 6061-T6. INSULATE VENT WITH 1.5" FLEXIBLE UNICELLULAR INSULATION. PROVIDE VENT CAP. PROVIDE ROOFTOP BARRIER PER GE DRAWINGS. COORDINATE PENETRATION OF RF CAGE CEILING WITH UNIVERSAL SHIELDING CORP. SEE SECTION A-A ON SHEET US-3 OF USC DRAWINGS.
4. PROVIDE RG-2 ABOVE CEILING, UNDER RF SHIELD. BALANCE TO 300 CFM.
5. PROVIDE WALL SWITCH FOR EF-2.
6. PROVIDE 2" COPPER PIPE TO CONNECT KKT CHILLER PROVIDED BY OTHERS WITH INTEGRATED COOLING CABINET PROVIDED BY OTHERS. PROVIDE FLOW METER IN SUPPLY PIPING. REFER TO SHEET M3 OF GE DRAWINGS FOR MORE INFORMATION.
7. ROUTE INSULATED CONDENSATE BY GRAVITY FROM UNIT TO EXTERIOR WALL AS SHOWN. DROP DOWN INSIDE WALL CAVITY AND DISCHARGE CONDENSATE 4" ABOVE SPLASH BLOCK AT 45 DEGREES ANGLE CUT. PROVIDE 20"X12"X3" PRECAST CONCRETE ARCHITECTURAL SPLASH BLOCK.

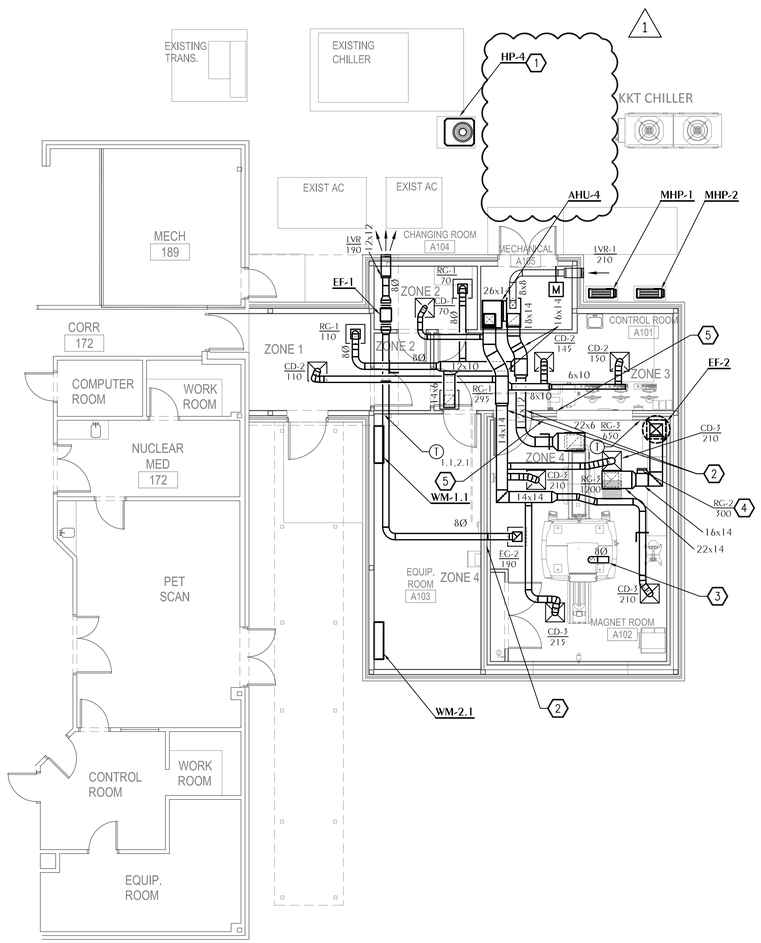

N 1 M-101 HVAC FLOOR PLAN
SCALE: 1/8" = 1'-0"

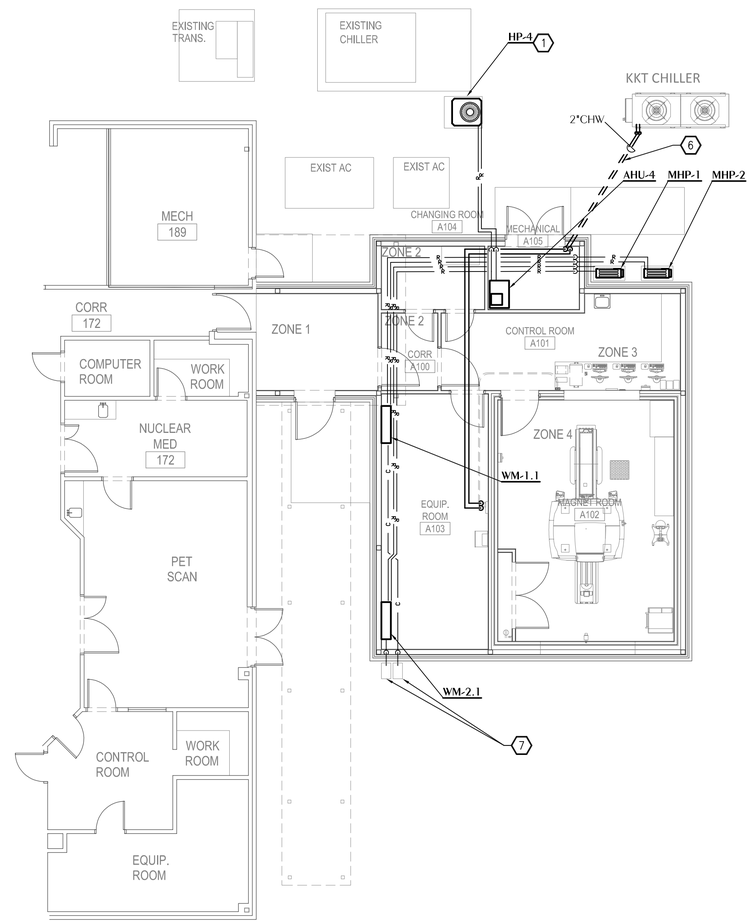

N 2 M-101 HVAC PIPING PLAN
SCALE: 1/8" = 1'-0"

WATFORD ENGINEERING
4452 Clinton Street Marianna, Florida 32446
2449 Moores Mill Rd, Suite 100 Auburn, AL 36830
Florida CA Number: 27825
Keith A. Johnson, PE
Florida License Number: 86457
850.526.3447 / 334.209.0212
Project Number: 2025-015
Checked By: KAJ
Drawn By: JFG

DAG ARCHITECTS
DAG Architects AR0009694
455 Harrison Ave Suite 1 Panama City, FL 32401
850.387.1671
www.DAGarchitects.com

BID DOCUMENTS

HCA FLORIDA GULF COAST HOSPITAL
Outpatient Rehabilitation & Diagnostic Center
DIAGNOSTICS MRI
ADDITION
2024 STATE STREET, PANAMA CITY, FL 32405

HCA Florida
Gulf Coast Hospital

REVISIONS:

No.	Description	Date
1	ADDENDUM 1	04/21/2025

HVAC FLOOR PLAN

PROJECT NUMBER	24107
DATED	03/28/2025

M-101

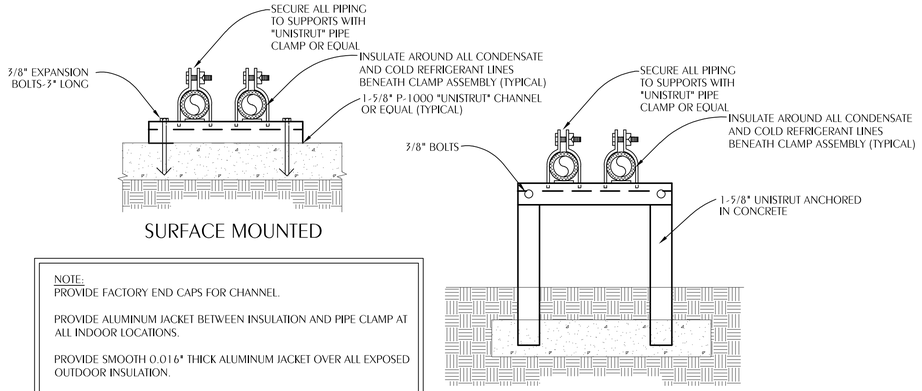

NOTE:
PROVIDE FACTORY END CAPS FOR CHANNEL.

PROVIDE ALUMINUM JACKET BETWEEN INSULATION AND PIPE CLAMP AT ALL INDOOR LOCATIONS.

PROVIDE SMOOTH 0.016" THICK ALUMINUM JACKET OVER ALL EXPOSED OUTDOOR INSULATION.

PROVIDE SUPPORT AT INTERVALS REQUIRED BY THE FLORIDA BUILDING CODE.

INSULATE ALL REFRIGERANT PIPING WITH 3/4" UNICELLULAR INSULATION.

1 / M-203 TYPICAL EXTERIOR PIPING SUPPORT DETAIL

SCALE: NONE

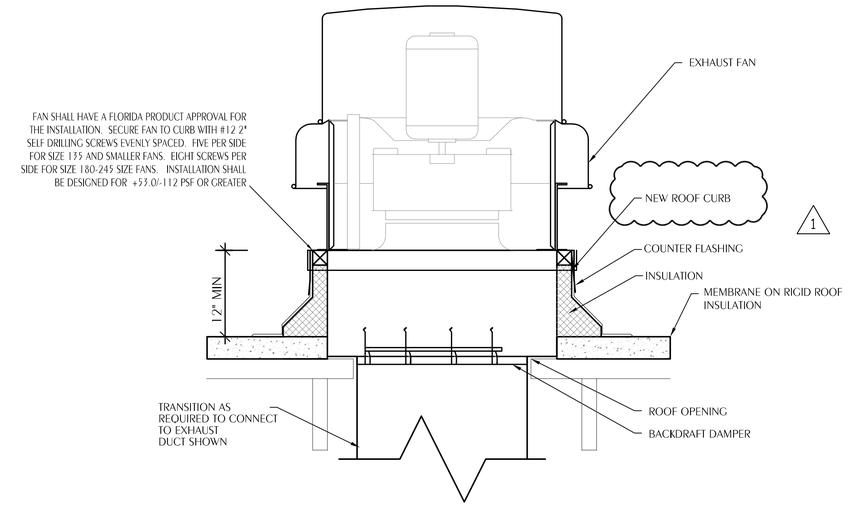

NOTES:
EXISTING ROOF IS METAL DECK WITH CONCRETE LAYER UNDER STEEL JOIST AT 4'-0" ON CENTER.

CURB SHALL BE INSTALLED LEVEL AS REQUIRED BY MANUFACTURER'S FLORIDA PRODUCT APPROVAL.

CURB SHALL BE A MINIMUM OF 12" ABOVE FINISHED ROOF SURFACE.

2 / M-203 ROOFTOP EXHAUST FAN DETAIL

SCALE: NONE

MIAMI-DADE NOA NO. 23-0815.03

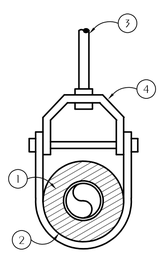

1. INSULATION
2. PIPE COVERING PROTECTION SADDLE
3. HANGER ROD FASTEN TO STRUCTURE PER SPECIFICATION
4. CLEVIS TYPE HANGER

3 / M-203 OVERHEAD PIPE SUPPORT

SCALE: NONE

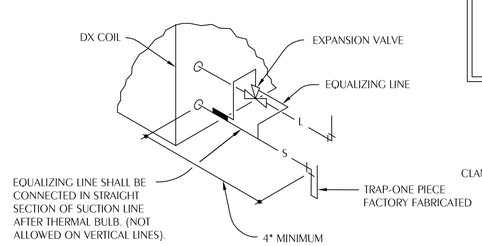

NOTES:
THERMOSTATIC BULB TO BE AS CLOSE TO COIL AS POSSIBLE NOT ALLOWED ON VERTICAL LINES.

INSULATE REFRIGERANT LINES WITH 3/4" FLEXIBLE UNICELLULAR INSULATION.

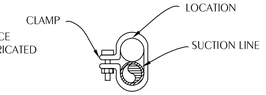

5/8" O.D. OR SMALLER

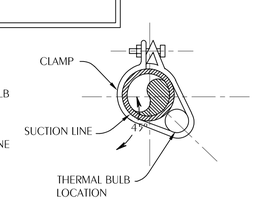

7/8" O.D. OR LARGER

4 / M-203 REFRIGERANT COIL CONNECTION DETAIL

SCALE: NONE

WATFORD ENGINEERING
4452 Clinton Street Marianna, Florida 32446
2449 Moores Mill Rd, Suite 100 Auburn, AL 36830

Florida CA Number: 27825
Keith A. Johnson, PE
Florida License Number: 86457
850.526.3447 / 334.209.0212
Project Number: 2025-015
Checked By: KAJ
Drawn By: JFG

DAG ARCHITECTS

DAG Architects AR0009694
455 Harrison Ave Suite 1 Panama City, FL 32401
850.387.1671
www.DAGarchitects.com

BID DOCUMENTS

HCA FLORIDA GULF COAST HOSPITAL
Outpatient Rehabilitation & Diagnostic Center
DIAGNOSTICS MRI ADDITION
2024 STATE STREET, PANAMA CITY, FL 32405

HCA Florida
Gulf Coast Hospital

REVISIONS:

No.	Description	Date
1	ADDENDUM 1	04/21/2025

HVAC DETAILS

PROJECT NUMBER	24107
DATED	03/28/2025

M-203

22017
CONSTRUCTION DWGS
2025-04-22

HVAC CONTROL GENERAL NOTES

1. THE DDC CONTRACTOR SHALL PROVIDE COMPLETE NEW DDC CONTROLLERS FOR THE NEW EQUIPMENT TO PERFORM THE INDICATED SEQUENCES, ALL OTHER FUNCTIONS REQUIRED BY THE CONTRACT DOCUMENTS, AND ALL OTHER FUNCTIONS REQUIRED FOR A COMPLETE AND FUNCTIONAL SYSTEM. THE CONTROLLERS SHALL TIE INTO THE EXISTING JOHNSON CONTROLS METASYS SYSTEM.
2. THE CONTROLS CONTRACTOR SHALL PROGRAM ALL DEVICES WITH THE OWNER'S OCCUPIED/UNOCCUPIED SCHEDULE AND LOCAL TIME.
3. ALL SEQUENCES ARE SUBJECT TO SAFETIES. DDC CONTRACTOR SHALL PROVIDE ALL NECESSARY AND CUSTOMARY SAFETIES.
4. ALL WIRING SHALL BE IN CONDUIT. ALL CONDUIT SHALL BE IN ACCORDANCE WITH ELECTRICAL SPECIFICATIONS, REQUIREMENTS FOR 120 VAC CIRCUITS.
5. ALL CONTROL TUBING SHALL BE RUN IN CONDUIT. ALL CONDUIT SHALL BE IN ACCORDANCE WITH ELECTRICAL SPECIFICATIONS, REQUIREMENTS FOR 120 VAC CIRCUITS.
6. CONDUIT SHALL BE RUN PERPENDICULAR AND PARALLEL TO BUILDING LINES IN A FIRST CLASS WORKMANSHIP LIKE MANNER.
7. NO EXPOSED CONDUIT SHALL BE USED IN FINISHED SPACES.
8. IN ADDITION TO SYSTEMS NOTED IN SPECIFIC CONTROL DIAGRAMS ON THESE DRAWINGS, THE DDC SHALL MONITOR DUCTLESS SPLIT AND MULTIZONE DUCTLESS SPLIT SYSTEM CONTROLLERS THE MRI EQUIPMENT ROOM. THE DDC SHALL READ AND IDENTIFY ALL POINTS TRANSMITTED BY THE FACTORY CONTROLLER. THE DDC SHALL INCLUDE A SYSTEM GRAPHIC FOR EACH CONTROLLED DEVICE WITH SPACE SET POINTS IDENTIFIED AND ADJUSTABLE FROM THE GRAPHIC.

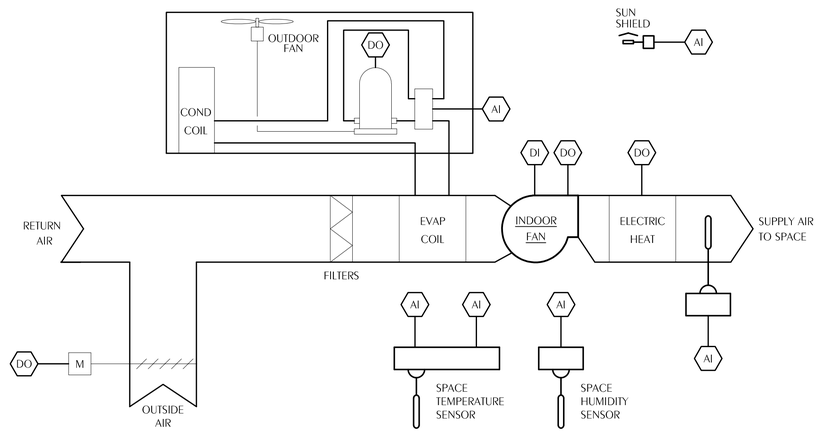

1 M-301 HEAT PUMP-UNTREATED OA CONTROL DIAGRAM
SCALE: NONE

SEQUENCE OF OPERATION
HEAT PUMP-UNTREATED OA

GENERAL: STARTING AND STOPPING OF EQUIPMENT SHALL BE BY A HAND-OFF-AUTO SWITCH. WITH THE HOA SWITCH IN THE AUTO POSITION, THE UNIT SHALL BE STARTED AUTOMATICALLY BY THE ELECTRONIC CONTROL SYSTEM AND ALL CONTROLS ACTIVATED SUBJECT TO THE FIRE ALARM RELAY, SAFETIES AND OVERLOADS. ZONE TEMPERATURE SENSORS SHALL BE PROVIDED WITH A COMMUNICATIONS JACK. ZONE HUMIDITY SETPOINTS SHALL BE SET AT THE DDC PANEL.

OCCUPIED MODE: THE MOTORIZED OA DAMPER SHALL OPEN TO THE BALANCED POSITION AND THE INDOOR FAN SHALL RUN CONTINUOUSLY. THE HP SHALL CYCLE TO MAINTAIN SPACE TEMPERATURE. THE SETPOINT FOR COOLING SHALL BE 75°F ADJUSTABLE. THE SETPOINT FOR HEATING SHALL BE 70°F ADJUSTABLE. THE SUPPLEMENTAL ELECTRIC HEAT SHALL OPERATE AS A SECOND STAGE OF HEATING.

UNOCCUPIED MODE: THE MOTORIZED OA DAMPER SHALL CLOSE. THE INDOOR FAN AND HP SHALL CYCLE TO MAINTAIN SETPOINT TEMPERATURE. THE SETPOINT FOR COOLING SHALL BE 80°F ADJUSTABLE. THE SETPOINT FOR HEATING SHALL BE 65°F ADJUSTABLE.

OVERRIDE MODE: THE OVERRIDE MODE SHALL PLACE THE SYSTEM IN OCCUPIED MODE FOR 1 HR AND THE OUTSIDE AIR DAMPER FOR THE UNIT IN OVERRIDE SHALL OPEN TO THE BALANCED POSITION.

HUMIDITY CONTROL: UPON A RISE IN SPACE RELATIVE HUMIDITY ABOVE SETPOINT AND NO CALL FOR COOLING, THE DDC SHALL PLACE THE HP COMPRESSOR IN COOLING MODE AND UTILIZE THE ELECTRIC HEAT TO REHEAT SUPPLY AIR UNTIL THE CALL FOR DEHUMIDIFICATION HAS BEEN SATISFIED. A CALL FOR COOLING FROM THE SPACE SHALL OVERRIDE THE HUMIDITY CONTROL SEQUENCE.

HEAT PUMP-UNTREATED OA POINTS LIST

	HARDWARE POINTS				SOFTWARE POINTS					
POINT NAME	AI	AO	DI	DO	AV	DV	SCHED	TREND	ALARM	GRAPHIC
ZONE TEMP SETPOINT	X									X
ZONE TEMP	X								X	X
ZONE HUMIDITY	X								X	X
OUTDOOR AIR TEMP	X									X
MIXED AIR TEMP	X									X
SUPPLY AIR TEMP	X									X
ELECTRIC HEAT				X						X
OA DAMPER				X						X
REVERSING VALVE				X						X
COMPRESSOR				X						X
FAN START/STOP				X						X
FAN STATUS			X						X	X

WATFORD ENGINEERING
4452 Clinton Street Marianna, Florida 32446
2449 Moores Mill Rd, Suite 100 Auburn, AL 36830
Florida CA Number: 27825
Keith A. Johnson, PE
Florida License Number: 86457
850.526.3447 / 334.209.0212
Project Number: 2025-015
Checked By: KAJ
Drawn By: JFG

DAG ARCHITECTS
DAG Architects AR0009694
455 Harrison Ave Suite 1 Panama City, FL 32401
850.387.1671
www.DAGarchitects.com

BID DOCUMENTS

HCA FLORIDA GULF COAST HOSPITAL
Outpatient Rehabilitation & Diagnostic Center
DIAGNOSTICS MRI
ADDITION
2024 STATE STREET, PANAMA CITY, FL 32405

HCA Florida
Gulf Coast Hospital

REVISIONS:

No.	Description	Date
1	ADDENDUM 1	04/21/2025

HVAC CONTROLS

PROJECT NUMBER	24107
DATED	03/28/2025

M-301
1

22017
CONSTRUCTION DWGS
2025-04-25

DEMOLITION NOTES

1. PLANNED INTERRUPTIONS OF UTILITY SERVICE TO ANY FACILITY OR AREAS WITHIN ANY FACILITY AFFECTED BY THIS CONTRACT, SHALL BE CAREFULLY PLANNED AND COORDINATED WITH THE FACILITY PERONNEL IN ADVANCE OF THE REQUESTED INTERRUPTION. THE CONTRACTOR SHALL NOT INTERRUPT SERVICES UNTIL SPECIFIED APPROVAL HAS BEEN GRANTED. THE REQUEST SHALL INDICATE SERVICES AND AREAS TO BE AFFECTED, DATE AND TIME OF INTERRUPTION AND DURATION OF OUTAGE. REQUEST FOR INTERRUPTION OF SERVICE WILL NOT BE APPROVED UNTIL ALL EQUIPMENT AND MATERIAL REQUIRED FOR THE COMPLETION OF THAT PARTICULAR PHASE OF WORK ARE ON THE JOB SITE.
2. ALL DEMOLITION WORK REQUIRED SHALL BE PERFORMED WITH CARE SO AS NOT TO INTERRUPT OTHER EXISTING SERVICES (WATER, GAS, ELECTRICAL, SEWER, SPRINKLERS, ETC.). IF ACCIDENTAL UTILITY INTERRUPTION, DAMAGE, ETC., RESULTS FROM WORK PERFORMED BY THE CONTRACTOR, THE AFFECTED UTILITY OR SERVICE SHALL BE RETURNED TO ITS ORIGINAL CONDITION WITHOUT DELAY, BY AND AT THE EXPENSE OF THE CONTRACTOR, USING SKILLED WORKMEN OF THE TRADE INVOLVED.
3. REMOVE ALL OUTLETS, PULL BOXES, JUNCTION BOXES, ETC., AS REQUIRED TO COMPLETELY REMOVE THE ELECTRICAL ITEMS SHOWN FOR DEMOLITION UNLESS NOTED TO REMAIN. DISCONNECT AND REMOVE ALL ELECTRICAL PROVISIONS TO EQUIPMENT BEING REMOVED.
4. REMOVE ALL WIRING, CONDUIT, RACEWAYS, OUTLET BOXES, SUPPORTING APPARATUS ETC., AS REQUIRED.
5. SYMBOLS SHOWN ARE TYPICAL AND LOCATIONS ARE APPROXIMATE AND ARE NOT INTENDED TO LIMIT THE AMOUNT OF DEMOLITION. COORDINATE WITH EXISTING CONDITIONS AND THESE NOTES AND REMOVE ALL APPLICABLE SYSTEMS AND COMPONENTS CONFLICTING WITH FINISHED DESIGN INTENT.
6. EXISTING BRANCH WIRING SHOWN IS DIAGRAMMATICAL ONLY AND IS BASED UPON EXISTING AS-BUILT DRAWINGS AND SURVEYS. COORDINATE WITH ACTUAL EXISTING CONDITIONS FOR NUMBER OF CONDUCTORS PER CONDUIT AND EXACT LOCATIONS OF CONDUIT RUNS AND EQUIPMENT.
7. ALL FEEDERS, SYSTEMS, CONTROL WIRING, MISCELLANEOUS AUXILIARY SYSTEMS, ETC., PASSING THROUGH THE AREA OF WORK SHALL BE MAINTAINED AT ALL TIMES, REMAIN IN SERVICE, CONTINUOUS AND UNINTERRUPTED. ANY DAMAGE, DISRUPTION OR DISCONNECTION SHALL BE IMMEDIATELY REPAIRED, REPLACED AND/OR REROUTED AS REQUIRED TO MAINTAIN CONTINUITY OF SYSTEMS. ANY EXISTING SERVICE OR OPERATING SYSTEM WHICH MUST BE INTERRUPTED SHALL BE SUPPLIED WITH A TEMPORARY SERVICE FOR CONTINUATION OF THE NORMAL OPERATIONS OF THE FACILITY.
8. ANY EQUIPMENT THAT REQUIRES REMOVAL FROM EXISTING LOCATION FOR RE-USE OR TO BE RETURNED TO OWNER SHALL BE INSPECTED AND TESTED TO CONFIRM EQUIPMENT OPERATES AS INTENDED. OWNER SHALL BE NOTIFIED OF ANY EQUIPMENT THAT DOES NOT OPERATE AS INTENDED BEFORE REMOVAL.
9. CONCEALED CONDUIT THAT CANNOT BE REMOVED DUE TO INACCESSIBILITY MAY BE ABANDONED. CONDUCTORS SHALL BE REMOVED AND CONDUIT CUT FLUSH WITH SURFACE. INSTALL PLUG 6" INTO CONDUIT AND FILL REMAINING CONDUIT WITH CONCRETE, GROUT, OR OTHER PERMANENT FILLER FLUSH WITH SURFACE.
10. OUTLET BOXES THAT CANNOT BE REMOVED DUE TO FLUSH MOUNTING IN PARTITIONS SHALL BE FILLED WITH GROUT, PATCHED AND FINISHED FLUSH TO MATCH EXISTING WALL CONDITIONS.
11. IN GENERAL, THE WORK SHALL INCLUDE BUT NOT BE LIMITED TO THE FOLLOWING:
    a. PROVIDE ALL DEMOLITION AS REQUIRED OF EXISTING SYSTEMS REMOVING ALL ITEMS THAT CONFLICT WITH FINISHED DESIGN INTENT AS INDICATED ABOVE.
    b. MODIFY, REPLACE, REPAIR, REVISE ETC., EXISTING SYSTEMS AND/OR EQUIPMENT.
    c. EXTEND EXISTING SYSTEMS AS REQUIRED TO FUNCTION AS SPECIFIED AND IN ACCORDANCE WITH SYSTEM REQUIREMENTS.
    d. NEW SYSTEM COMPONENTS SHALL MATCH EXISTING SYSTEMS PROVISIONS AND BE COMPLETELY COMPATIBLE AND IN ACCORDANCE WITH THE MANUFACTURER'S REQUIREMENTS. WHEN REQUIRED, APPROVAL FROM A SYSTEM MANUFACTURER SHALL BE OBTAINED BY THE CONTRACTOR PRIOR TO INSTALLING ANY NEW EQUIPMENT OR DEVICES TO AN EXISTING SYSTEM.
    e. ALL EQUIPMENT, DEVICES, OUTLETS, COMPONENTS, ETC., TO BE REUSED SHALL BE CLEANED, REPAIRED AND PLACED IN OPERATING CONDITION. LUMINARIES NOTED TO BE REUSED SHALL BE CLEANED, REPAIRED, PROVIDED WITH NEW LAMPS AND PLACED IN OPERATING CONDITION.
    f. EXISTING OUTLET BOXES MAY BE USED AS NOTED IF OF THE PROPER CONFIGURATION AND SIZE REQUIRED. MODIFICATIONS SHALL BE MADE WHEN REQUIRED SUCH AS PROVIDING EXTENSION RINGS, LOCKNUTS, BUSHINGS, ETC.
    g. EXISTING PANELBOARDS SHALL BE UTILIZED TO THE EXTENT SHOWN ON THE DRAWINGS AND MODIFIED AS REQUIRED TO FACILITATE THE NEW REQUIREMENTS AS INDICATED HEREIN OR SHOWN ON THE DRAWINGS. NEW CIRCUIT BREAKERS SHALL BE OF THE SAME MANUFACTURER, FRAME SIZE, SHORT CIRCUIT RATING AND TYPE AS EXISTING. WHERE APPLICABLE, THE CONTRACTOR SHALL BE REQUIRED TO FURNISH AND INSTALL ADDITIONAL MOUNTING HARDWARE AS REQUIRED BY THE MANUFACTURER.
    h. WHEN EXISTING DEVICES, SWITCHES, EQUIPMENT ETC., ARE NOTED TO BE REMOVED AND THE CIRCUIT(S) SERVING SUCH ITEMS SERVES OTHER ITEMS OR DEVICES WHICH ARE TO BE MAINTAINED, THE CONTRACTOR SHALL REROUTE, EXTEND, MODIFY, ETC., EXISTING CIRCUITS AS REQUIRED TO MAINTAIN COMPLETE AND OPERATING SYSTEMS.

APPLICABLE CODE REFERENCES
FLORIDA BUILDING CODE, 8TH EDITION 2023
NATIONAL ELECTRIC CODE (NEC) NFPA 70 2020
NFPA 72, 2019 EDITION, NATIONAL FIRE ALARM AND SIGNALING CODE.
NFPA 1, THE FIRE CODE FLORIDA 2021 EDITION
NFPA 101, THE LIFE SAFETY CODE®, FLORIDA 2021 EDITION
FLORIDA FIRE PREVENTION CODE (FFPC) 2023
GUIDELINES FOR THE DESIGN AND CONSTRUCTION OF HOSPITALS, 2022 EDITION.

GENERAL NOTES

A. CONTRACTOR SHALL COORDINATE ALL WORK WITH OTHER TRADES PRIOR TO INSTALLATION. REFER TO MECHANICAL AND PLUMBING DRAWINGS FOR EXACT SIZE AND LOCATION OF EQUIPMENT WHICH IS FURNISHED BY OTHERS AND CONNECTED BY ELECTRICAL.

B. RECEPTACLES, SWITCHES AND COVERPLATES COLOR SHALL BE SELECTED BY THE ARCHITECT FROM STANDARD COLORS.

C. VERIFY ALL DOOR SWINGS WITH ARCHITECTURAL DRAWINGS PRIOR TO ROUGHING-IN WALL FOR SWITCHES.

D. LOCATION OF LIGHTING FIXTURES, DISCONNECT SWITCHES, ETC. FOR MECHANICAL EQUIPMENT/ROOM SHALL BE COORDINATED WITH FINAL MECHANICAL EQUIPMENT LOCATION TO PROVIDE NATIONAL ELECTRIC CODE REQUIRED ACCESS SPACE.

E. FINAL CONNECTION TO ALL MOTORS SHALL BE WITH FLEXIBLE CONDUIT CONNECTION.

F. ALL EXIT AND EMERGENCY FIXTURES SHALL BE CONNECTED TO LIGHT CIRCUIT AHEAD OF LOCAL SWITCH.

G. ALL PANELBOARDS, BACKBOARDS, TERMINAL CABINETS, ETC SHALL HAVE CUSTOM ENGRAVED MICARTA NAMEPLATE MECHANICALLY AFFIXED IDENTIFYING SYSTEM.

H. PROVIDE GREEN GROUND CONDUCTOR IN ALL CIRCUITS - SIZE PER N.E.C.

I. ALL EXPOSED CONDUITS, BOXES, STRAPS AND HANGERS IN THE CONTRACT AREA WHETHER NEW OR EXISTING THAT ARE PART OF THE ELECTRICAL SYSTEM SHALL BE PAINTED TO MATCH ADJACENT FINISH.

J. GENERAL CONTRACTOR SHALL FIELD-VERIFY ALL EXISTING CONDITIONS PRIOR TO BEGINNING ANY WORK, AND SHALL IMMEDIATELY NOTIFY THE ARCHITECT OF ANY DISCREPANCIES. FAILURE TO DO SO INDICATES THAT THE CONTRACTOR ACCEPTS THE CONDITIONS AS THEY EXIST, AND SHALL PERFORM THE WORK REQUIRED AS SHOWN AND SPECIFIED.

K. THE ELECTRICAL CONTRACTOR SHALL OBTAIN AND REVIEW THE MECHANICAL AND SPECIAL EQUIPMENT SUBMITTALS PRIOR TO SUBMITTING THE ELECTRICAL SUBMITTALS. ANY ELECTRICAL EQUIPMENT, CONDUIT, AND WIRE SIZE CHANGES RESULTING FROM THIS REVIEW SHALL ALSO BE SUBMITTED FOR APPROVAL.

L. FIRE ALARM LOW VOLTAGE SOURCE AND BATTERY STANDBY SHALL ENERGIZE ALL ITEMS IN FIRE ALARM SYSTEM THAT REQUIRE POWER.

M. THE ELECTRICAL CONTRACTOR SHALL PROVIDE FAULT CURRENT CALCULATIONS FOR THE SERVICE EQUIPMENT AND SHALL MARK THE EQUIPMENT WITH THE AVAILABLE FAULT CURRENT AND DATE OF THE CALCULATION PER NEC 110.24. REFER TO TYPICAL SERVICE EQUIPMENT FAULT CURRENT LABEL DETAIL.

N. THE ELECTRICAL CONTRACTOR SHALL PROVIDE ARC FAULT LABELS PER NFPA 70E ARTICLE 110.16 FOR NEW EQUIPMENT. THE OWNER SHALL PROVIDE AVAILABLE CALCULATION DATA FOR THE EXISTING EQUIPMENT IN THE ELECTRICAL SYSTEM. REFER TO TYPICAL ARC FLASH HAZARD LABEL DETAIL.

O. PROVIDE NEUTRAL AT ALL LINE VOLTAGE SWITCH LOCATIONS PER N.E.C. 404.2(C).

P. PROVIDE 'LSI' TRIP UNITS FOR ALL BREAKERS GREATER THAN OR EQUAL TO 200A.

Q. PROVIDE BUSHINGS ON ALL CONDUIT.

R. COMPLY WITH ALL LOCAL CODE, LAWS, AND ORDINANCES APPLICABLE TO ELECTRICAL WORK, THE STATE BUILDING CODE AND THE NATIONAL ELECTRIC CODE. OBTAIN ALL PERMITS REQUIRED BY LOCAL ORDINANCES.

S. OBTAIN ARCHITECTS APPROVAL OF ALL LIGHT FIXTURES, SWITCHES, RECEPTACLES, PANELBOARDS, ETC. PRIOR TO PURCHASING.

T. THE ELECTRICAL WORK SHALL BE INSTALLED IN A NEAT AND WORKMANLIKE MANNER. ALL NOT SO INSTALLED SHALL BE REMOVED AND REPLACED AT NO COST TO THE OWNER.

U. THE CONTRACTOR SHALL LEAVE THE ENTIRE ELECTRICAL SYSTEM INSTALLED IN PROPER WORKING ORDER, AND SHALL REPLACE WITHOUT ADDITIONAL COST, ALL WORK OR MATERIAL WHICH MAY DEVELOP DEFECTS, (ORDINARY WEAR AND TEAR OR DAMAGE RESULTING FROM IMPROPER HANDLING EXCEPTED) WITHIN A PERIOD OF ONE (1) YEAR FROM THE DATE OF FINAL ACCEPTANCE BY THE OWNER.

V. ALL WORK SHALL BE INSTALLED IN CONCEALED TYPE CONSTRUCTION. UNDERGROUND CONDUITS UP TO FIRST BOX IN CONCEALED CONSTRUCTION MAY BE SCH.40 PVC. EXTERIOR EXPOSED WORK SHALL BE I.M.C. BRANCH CIRCUIT CONDUIT RUN IN OPEN SPACES ABOVE CEILING OR IN WALLS MAY BE THINWALL (E.M.T.) CONDUIT 1/2" MIN. SIZE.

W. ALL CONDUCTORS LESS THAN 100A. SHALL BE COPPER #12 & #10 SOLID, #8 AND LARGER STRANDED, #6 AND SMALLER TO BE TYPE THWN, 600 VOLT INSULATION AND TYPE THWN OR THHN FOR #4 AND LARGER. ALUM. CONDUCTORS MAY BE USED FOR 100A. AND LARGER ONLY WHERE USED WITH COMPRESSION TERMINATIONS.

X. PROVIDE GROUNDING PER NATIONAL ELECTRIC CODE.

GE HEALTHCARE NOTES

A. ALL LIGHTING FIXTURES AND ASSOCIATED COMPONENTS MUST MEET ALL RF SHIELDED ROOM AND RF GROUNDING REQUIREMENTS.

B. ALL REMOVABLE LIGHTING FIXTURES AND ASSOCIATED COMPONENTS MUST BE NON-MAGNETIC.

C. ALL LIGHTING MUST USE DIRECT CURRENT (THE DC MUST HAVE LESS THAN 5% RIPPLE).

D. 300 LUX MUST BE PROVIDED AT THE FRONT OF THE MAGNET FOR PATIENT ACCESS AND ABOVE THE MAGNET FOR SERVICING.

E. FLUORESCENT LIGHTING MUST NOT BE USED IN THE MAGNET ROOM.

F. LIGHTING MUST BE ADJUSTED USING A DISCRETE SWITCH OR A VARIABLE DIC LIGHTING CONTROLLER.

G. SCR DIMMERS OR RHEOSTATS MUST NOT BE USED.

H. DC LED LIGHTING MAY BE USED IF THE DC POWER CONVERTER AND RF SOURCES ARE ALL LOCATED OUTSIDE THE MAGNET ROOM RF SHIELD.

I. LED LIGHTING COULD CAUSE IMAGE QUALITY ISSUES DUE TO RF INTERFERENCE. MAKE SURE A MR-COMPATIBLE LED LIGHTING SOLUTION IS CHOSEN.

J. BATTERY CHARGERS (E.G., USED FOR EMERGENCY LIGHTING) MUST BE LOCATED OUTSIDE THE MAGNET ROOM.

K. LED LIGHTING OR SHORT FILAMENT LENGTH INCANDESCENT BULBS ARE RECOMMENDED.

L. LINEAR LAMPS ARE NOT RECOMMENDED DUE TO THE HIGH BURNOUT RATE.

M. ALUMINUM OR SOLID WIRES ARE NOT ALLOWED.

N. IT IS RECOMMENDED THAT ALL WIRES BE COLOR CODED, AS REQUIRED IN ACCORDANCE WITH NATIONAL AND LOCAL ELECTRICAL CODES.

O. ROUTING OF CABLE DUCTWORK, CONDUITS, ETC., MUST RUN DIRECT AS POSSIBLE OTHERWISE MAY RESULT IN THE NEED FOR GREATER THAN STANDARD CABLE LENGTHS (REFER TO THE INTERCONNECTION DIAGRAM FOR MAXIMUM USABLE LENGTHS POINT TO POINT).

P. CONDUIT TURNS TO HAVE LARGE, SWEEPING BENDS WITH MINIMUM RADIUS IN ACCORDANCE WITH NATIONAL AND LOCAL ELECTRICAL CODES.

Q. IN SOME CASES GEHC WILL SPECIFY GROUND WIRES TO BE SIZED LARGER THAN CODE. IN THESE SITUATIONS, THE GEHC SPECIFICATION MUST BE FOLLOWED.

R. A SPECIAL GROUNDING SYSTEM IS REQUIRED IN ALL PROCEDURE ROOMS BY SOME NATIONAL AND LOCAL CODES. IT IS RECOMMENDED IN AREAS WHERE PATIENTS MIGHT BE EXAMINED OR TREATED UNDER PRESENT, FUTURE, OR EMERGENCY CONDITIONS. CONSULT THE GOVERNING ELECTRICAL CODE AND CONFER WITH APPROPRIATE CUSTOMER ADMINISTRATIVE PERSONNEL TO DETERMINE THE AREAS REQUIRING THIS TYPE OF GROUNDING SYSTEM.

S. PHYSICAL CONNECTION OF PRIMARY POWER TO GEHC EQUIPMENT IS TO BE MADE BY CUSTOMERS ELECTRICAL CONTRACTOR WITH THE SUPERVISION OF A GEHC REPRESENTATIVE. THE GEHC REPRESENTATIVE WOULD BE REQUIRED TO IDENTIFY THE PHYSICAL CONNECTION LOCATION, AND INSURE PROPER HANDLING OF GEHC EQUIPMENT.

T. GEHC CONDUCTS POWER AUDITS TO VERIFY QUALITY OF POWER BEING DELIVERED TO THE SYSTEM. THE CUSTOMER'S ELECTRICAL CONTRACTOR IS REQUIRED TO BE AVAILABLE TO SUPPORT THIS ACTIVITY.

U. EVERY INSTALLATION IS UNIQUE. THE ELECTRICAL CONTRACTOR WILL BE REQUIRED TO SUPPORT THE INSTALLATION OF THE GEHC EQUIPMENT BY PROVIDING KNOCKOUTS, GROMMETED OPENINGS, BUSHINGS, ETC. AS REQUIRED. ALL POWER CONNECTIONS TO BE PERFORMED BY THE ELECTRICIAN.

V. ALL JUNCTION BOXES, CONDUIT, DUCT, DUCT DIVIDERS, SWITCHES, CIRCUIT BREAKERS, CABLE TRAY, ETC., ARE TO BE SUPPLIED AND INSTALLED BY CUSTOMERS ELECTRICAL CONTRACTOR. ALL JUNCTION BOXES SHALL BE PROVIDED WITH COVERS.

W. CONDUIT AND DUCT RUNS SHALL HAVE GRADUAL SWEEP RADIUS BENDS.

X. CONDUITS AND DUCT ABOVE CEILING OR BELOW FINISHED FLOOR MUST BE INSTALLED AS NEAR TO CEIILING OR FLOOR AS POSSIBLE TO REDUCE RUN LENGTH.

Y. CEIILING MOUNTED JUNCTION BOXES ILLUSTRATED ON THE GEHC PLAN MUST BE INSTALLED FLUSH WITH FINISHED CEILING.

Z. DUCTWORK SHALL BE METAL WITH DIVIDERS AND HAVE REMOVABLE, ACCESSIBLE COVERS.

AA. DUCTWORK SHALL BE CERTIFIED/RATED FOR ELECTRICAL POWER PURPOSES.

AB. DUCTWORK SHALL BE ELECTRICALLY AND MECHANICALLY BONDED TOGETHER IN AN APPROVED MANNER.

AC. PVC AS A SUBSTITUTE MUST BE USED IN ACCORDANCE WITH ALL LOCAL AND NATIONAL CODES.

AD. ALL OPENINGS IN RACEWAY AND ACCESS FLOORING ARE TO BE CUT OUT AND FINISHED OFF WITH GROMMET MATERIAL BY THE CUSTOMERS CONTRACTOR.

AE. ELECTRICAL CONTRACTOR TO PROVIDE MEASURED PULL STRINGS IN ALL CONDUIT AND RACEWAY RUNS.

AF. PROVIDE 10 FOOT PIGTAILS AT ALL JUNCTION POINTS

AG. GROUNDING IS CRITICAL TO EQUIPMENT FUNCTION AND PATIENT SAFETY. SITE MUST CONFORM TO WIRING SPECIFICATIONS SHOWN ON THE GEHC PLAN.

AH. YOUR NEW GE HEALTHCARE IMAGING MODALITY WILL REQUIRE LOCAL AND REMOTE CONNECTIVITY TO ENABLE OUR FULL RANGE OF DIGITAL SUPPORT:

LOCAL CONNECTIVITY - THIS ALLOWS YOUR SYSTEM TO CONNECT TO LOCAL DEVICES SUCH AS PACS AND MODALITY WORKLIST. WE WILL REQUIRE NETWORK INFORMATION TO CONFIGURE THE SYSTEM(S), AND A LIVE ETHERNET PORT(S) PRIOR TO THE DELIVERY OF THE SYSTEM(S).

REMOTE CONNECTIVITY - YOUR GE HEALTHCARE SERVICE WARRANTY INCLUDES INSITE™ (APPLICABLE TO INSITE CAPABLE PRODUCTS), A POWERFUL BROADBAND-BASED SERVICE WHICH ENABLES DIGITAL TOOLS THAT CAN HELP GUARD YOUR HOSPITAL AGAINST EQUIPMENT DOWNTIME AND REVENUE LOSS BY QUICKLY CONNECTING YOU TO A GE HEALTHCARE EXPERT.

AI. DEPENDING ON PRODUCT FAMILY AND SOFTWARE VERSION, IMAGING SYSTEMS CAN BE CONNECTED IN ONE OF THE FOLLOWING METHODS:

TLS OVER TCP PORT 443 (PREFERRED METHOD FOR NEW PRODUCTS) VIA: DNS RESOLUTION, CUSTOMER-PROVIDED PROXY, OR GE PROXY (AVAILABLE IN SOME REGIONS)

SITE-TO-SITE IPSEC VPN TUNNEL.

AJ. PLEASE PROVIDE THE GE PROJECT MANAGER WITH THE CONTACT INFORMATION FOR THE RESOURCE THAT CAN PROVIDE INFORMATION REQUIRED TO SET UP THESE CONNECTIONS. GEHC WILL SEND OUT COMMUNICATION TO THESE CONTACTS, WHICH WILL INCLUDE THE PROJECT'S CONNECTIVITY REQUIREMENTS, AND A CONNECTIVITY FORM. THIS FORM WILL NEED TO BE COMPLETED AND RETURNED TO GEHC PRIOR TO DELIVERY OF THE SYSTEM TO ENSURE THE SYSTEM IS TESTED AND CONNECTIVITY IS ENABLED PRIOR TO THE COMPLETION OF THE INSTALLATION.

ABBREVIATIONS

1P	ONE POLE	GFCI	GROUND FAULT CIRCUIT INTERRUPTER
2P	TWO POLE	GND	GROUND
3P	THREE POLE	HP	HORSEPOWER
4P	FOUR POLE	HVAC	HEATING, VENTILATING AND AIR CONDITIONING
A	AMPERE	Z	HERTZ (CYCLE) PER SECOND
AC	ALTERNATING CURRENT	JB	JUNCTION BOX
AFF	ABOVE FINISHED FLOOR	KCMIL	THOUSAND CIRCULAR MILS
AHU	AIR HANDLING UNIT	KVA	KILOVOLT AMPERE
AIC	AMPERE INTERRUPTING CAPACITY	KW	KILOWATT
AWG	AMERICAN WIRE GAUGE	LTG	LIGHTING
BLDG	BUILDING	LV	LOW VOLTAGE
C	CONDUIT	LSIG	LONG TIME, SHORT TIME, INSTANTANEOUS, AND GROUND TRIP UNITS
CB	CIRCUIT BREAKER	MCB	MAIN CIRCUIT BREAKER
CKT	CIRCUIT	MLO	MAIN LUGS ONLY
CU	COPPER	MTG	MOUNTING
DISC	DISCONNECT	NEC	NATIONAL ELECTRICAL CODE
DN	DOWN	Ø	PHASE
DWG	DRAWING	PNL	PANELBOARD
ECB	ENCLOSED CIRCUIT BREAKER	SEC	SECONDARY
EF	EXHAUST FAN	SW	SWITCH
ELEC	ELECTRICAL	UG	UNDERGROUND
EWC	ELECTRIC WATER COOLER	V	VOLT
FA	FIRE ALARM	W	WATT
FLA	FULL LOAD AMPS	XFMR	TRANSFORMER

REFERENCE DESIGNATIONS

SYMBOL	DESCRIPTION
1	KEYNOTE REFERENCE
1	FEEDER NOTE REFERENCE
1	REVISION REFERENCE
	REVISION CLOUD MARKS REVISED PORTION OF DRAWING.

Sheet List Table

HG Engineers
621 N Tyndall Pkwy, Suite C
Panama City, FL 32404
E-mail: office@hgengineers.com
Ph: 850.243.6723
FL Authorization No.00006680
Christopher A. Garick; FL. PE No.53924
Thomas A. Alexander; FL. PE No.73172
Daniel J. White; FL. PE No.73790
Caleb W. Leonard; FL. PE No.91782

24110
Job No.

DAG ARCHITECTS
DAG Architects AR0009694
455 Harrison Ave Suite I Panama City, FL 32401
850.387.1671
www.DAGarchitects.com

BID DOCUMENTS

HCA FLORIDA GULF COAST HOSPITAL
Outpatient Rehabilitation & Diagnostic Center
DIAGNOSTICS MRI ADDITION
2024 STATE STREET, PANAMA CITY, FL 32405

HCA Florida
Gulf Coast Hospital

REVISIONS:

No.	Description	Date
1	Addendum 1	04/22/2025

LEGEND AND NOTES

PROJECT NUMBER	24107
DATED	03/28/2025

E-001

22017
CONSTRUCTION DWGS
2025-04-25

ELECTRICAL EQUIPMENT

SYMBOL	DESCRIPTION	SPECIFICATION
	SURFACE MOUNTED PANEL; LINE TO GROUND VOLTAGE LESS THAN 150V; TYP. 208Y/120V	SEE PANEL SCHEDULE
	SURFACE MOUNTED PANEL; LINE TO GROUND VOLTAGE GREATER THAN 150V; TYP. 480Y/277V	SEE PANEL SCHEDULE
T	TRANSFORMER	SEE RISER
	NON-FUSED DISCONNECT	SEE EQUIPMENT SCHEDULE

DESIGNATION	DESCRIPTION
MDP	EQUIPMENT NAME INDICATION; EXAMPLE SHOWN AS "MDP"
	DISCONNECT SIZE INDICATION SHALL BE AMPS/POLES/NEMA-RATING; EXAMPLE SHOWN IS 30 AMPS, 3 POLES, NEMA 3R

POWER DISTRIBUTION NOTES

1. ALL PANELBOARDS, BACKBOARDS, TERMINAL CABINETS, ETC SHALL HAVE CUSTOM ENGRAVED NAMEPLATE MECHANICALLY AFFIXED IDENTIFYING SYSTEM. REFER TO EQUIPMENT LABELING DETAILS.
2. LOCATION OF DISCONNECT SWITCHES, ETC. FOR MECHANICAL EQUIPMENT/ROOM SHALL BE COORDINATED WITH FINAL MECHANICAL EQUIPMENT LOCATION TO PROVIDE NATIONAL ELECTRIC CODE REQUIRED ACCESS SPACE.
3. THE ELECTRICAL CONTRACTOR SHALL PROVIDE FAULT CURRENT CALCULATIONS FOR THE SERVICE EQUIPMENT AND SHALL MARK THE EQUIPMENT WITH THE AVAILABLE FAULT CURRENT AND DATE OF THE CALCULATION PER NEC 110.24. REFER TO EQUIPMENT LABELING DETAILS.
4. THE ELECTRICAL CONTRACTOR SHALL PROVIDE ARC FAULT LABELS PER NFPA 70E ARTICLE 110.16 FOR NEW EQUIPMENT. THE OWNER SHALL PROVIDE AVAILABLE CALCULATION DATA FOR THE EXISTING EQUIPMENT IN THE ELECTRICAL SYSTEM. REFER TO EQUIPMENT LABELING DETAILS.

RECEPTACLES

SYMBOL	DESCRIPTION	SPECIFICATION
	HOSPITAL GRADE DUPLEX RECEPTACLE; 125V; 20A; 2 POLE; 3 WIRE GND; NEMA 5-20R	HUBBELL SERIES HBL8300
	HOSPITAL GRADE QUAD RECEPTACLE; 125V; 20A; 2 POLE; 3 WIRE GND; NEMA 5-20R	HUBBELL SERIES HBL8300
	HOSPITAL GRADE DUPLEX GFCI RECEPTACLE; 125V; 20A; 2 POLE; 3 WIRE GND; NEMA 5-20R	HUBBELL SERIES GFTRST83
X	SPECIAL PURPOSE RECEPTACLE. "X" INDICATES DEVICE TYPE. DEVICE TYPE: A = 125V, 20A, 3W, NEMA 5-20R B = 480V, 200A, 5W, NON-NEMA	 A = HUBBELL SERIES HBL8300RMRI B = RUSSELLSTOLL DF2504FRABØ

DESIGNATION	DESCRIPTION	SPECIFICATION
+XX"	MOUNTING HEIGHT INDICATION FOR OTHER THAN 18" AFF TO C/L. +XX" SHALL INDICATED MOUNTING INCHES ABOVE FINISHED FLOOR TO CENTER LINE. MOUNTING HEIGHT SHALL BE FIELD COORDINATED FOR THE FOLLOWING: +AC" = ABOVE COUNTER. +DF" = DRINKING FOUNTAIN +TV" = TELEVISION +DW" = DISHWASHER RECEPTACLE	
IG	"IG" INDICATES ISOLATED GROUND DEVICE	
WP	"WP" INDICATES WEATHER PROOF DEVICE AND WEATHER PROOF IN-USE COVER.	COVER: PASS AND SEYMOUR WIUFC10S

RECEPTACLE NOTES

1. ANY RECEPTACLE LOCATED IN WET ENVIRONMENT PROVIDE THE EQUIVALENT WP VERSION OF RECEPTACLE.
2. RECEPTACLES, SWITCHES AND COVERPLATES COLOR SHALL BE SELECTED BY THE ARCHITECT FROM STANDARD COLORS.
3. VERIFY EXACT LOCATION OF ALL FLOOR OUTLETS WITH THE ARCHITECT PRIOR TO ROUGHING-IN.
4. MOUNT RECEPTACLES 18" AFF TO C/L UNLESS NOTED OTHERWISE.

TELECOMMUNICATIONS

SYMBOL	DESCRIPTION	SPECIFICATION
	DATA OUTLET; PROVIDE 3/4"C WITH PULLSTRING FROM FROM WALL BOX TO ACCESSIBLE CEILING.	JUNCTION BOX & CONDUIT BY EC; DATA DEVICES AND COVERPLATES BY TELECOM CONTRACTOR.
	TELEPHONE OUTLET; PROVIDE 3/4"C WITH PULLSTRING FROM FROM WALL BOX TO ACCESSIBLE CEILING.	JUNCTION BOX & CONDUIT BY EC; DATA DEVICES AND COVERPLATES BY TELECOM CONTRACTOR.

TELECOMMUNICATIONS NOTES

1. MOUNT DATA OUTLETS 18" AFF TO C/L UNLESS NOTED OTHERWISE.

RACEWAYS AND CONDUCTORS

SYMBOL	DESCRIPTION
	RACEWAY INSTALLED CONCEALED IN WALLS OR ABOVE CEILING
	RACEWAY INSTALLED EXPOSED
	RACEWAY INSTALLED IN SLAB / BELOW GRADE / UNDER FLOOR
	EMERGENCY / LIFE SAFETY POWER CIRCUIT
	LOW VOLTAGE CONDUCTOR
P-1,3,5	HOMERUN ARROW WITH CIRCUIT TAG. CIRCUIT TAG INDICATES PANEL-SPACE,SPACE,SPACE. TAG SHOWN INDICATES PANEL "P" WITH 3 POLE CIRCUIT TO SPACES 1, 3, AND 5
	WIRE COUNT TICK MARKS. EACH TICK MARK INDICATES ONE CONDUCTOR IN RACEWAY. TICK MARK WITH DOT REPRESENTS EQUIPMENT GROUND. NO TICK MARK INDICATES 2 CONDUCTORS PLUS EQUIPMENT GROUND.
	ANNOTATIVE BREAK IN WIRE INDICATES CIRCUIT CONTINUES BEYOND WHAT IS SHOWN
	FLEXIBLE CONDUIT CONNECTION

(.) #_ & #_ - "C

- TOTAL NUMBER OF RUNS. SEE NOTE 1.
- TOTAL NUMBER OF CONDUCTORS PER RUN
- SIZE OF CONDUCTORS AWG OR KCMIL
- TRADE SIZE OF CONDUIT
- SIZE OF GROUNDING CONDUCTOR
- NUMBER GROUNDING CONDUCTORS. SHOULD ALWAYS BE 1.

NOTES
1. ONLY INDICATED IF MORE THAN ONE.
2. SEE FEEDER SCHEDULE
3. NO WIRE SIZE NOTED INDICATES 2#12 & 1#12 - 3/4"C.

EXAMPLE
2#10 & 1#10 - 3/4"C
- ONE RUN OF 3/4" CONDUIT CONTAINING TWO #10AWG AND ONE #10AWG GROUNDING CONDUCTOR.

(2)4#3/0 & 1#3 - 2"C
- TWO RUNS OF 2" CONDUIT WITH EACH CONDUIT CONTAINING FOUR #3/0AWG AND ONE #3/0AWG GROUNDING WIRE.

WIRING NOTES

1. ALL EXPOSED CONDUITS, BOXES, STRAPS AND HANGERS IN THE CONTRACT AREA WHETHER NEW OR EXISTING THAT ARE PART OF THE ELECTRICAL SYSTEM SHALL BE PAINTED TO MATCH ADJACENT FINISH.
2. FINAL CONNECTION TO ALL MOTORS SHALL BE WITH FLEXIBLE CONDUIT CONNECTION.
4. PROVIDE BUSHINGS ON ALL CONDUIT.
5. PROVIDE GREEN GROUND CONDUCTOR IN ALL CIRCUITS - SIZE PER N.E.C.

FIRE ALARM

SYMBOL	DESCRIPTION	SPECIFICATION
FACP	FIRE ALARM CONTROL PANEL / REMOTE ANNUNCIATOR PANEL AS INDICATED; SURFACE MOUNT.	EXISTING SILENT KNIGHT MODEL 5204 FIRE ALARM SYSTEM.
F	MANUAL PULL STATION.	DEVICE COMPATIBLE WITH EXISTING SYSTEM.
H	WALL MOUNT SIGNAL HORN/STROBE.	DEVICE COMPATIBLE WITH EXISTING SYSTEM.
	WALL MOUNT STROBE.	DEVICE COMPATIBLE WITH EXISTING SYSTEM.
H	CEILING MOUNT AUTOMATIC HEAT DETECTOR; 135 DEGREE RATE OF RISE.	DEVICE COMPATIBLE WITH EXISTING SYSTEM.
	AUTOMATIC AIR DUCT SMOKE DETECTOR; MOUNTING COORDINATED WITH MECHANICAL.	DEVICE COMPATIBLE WITH EXISTING SYSTEM.

DESIGNATION	DESCRIPTION	SPECIFICATION
110 H	FOR SIGNAL STROBE DEVICES 110 INDICATES 110 CANDELA RATING; NO INDICATION 75 CANDELA.	DEVICE COMPATIBLE WITH EXISTING SYSTEM.

FIRE ALARM NOTES

1. ALL MANUAL PULL STATIONS SHALL BE MOUNTED 48" AFF TO C/L; ALL WALL MOUNTED SIGNAL DEVICES SHALL BE LOCATED 80" AFF TO BOTTOM OF DEVICE, BUT NOT LESS THAN 6" FROM CEILING.
2. FOR SIGNAL DEVICES, STROBE CANDELA AND AUDIO SIGNAL SHALL BE SELECTABLE ON THE BACK OF THE DEVICE.
3. FIRE ALARM LOW VOLTAGE SOURCE AND BATTERY STANDBY SHALL ENERGIZE ALL ITEMS IN FIRE ALARM SYSTEM THAT REQUIRE POWER.

LIGHTING FIXTURES

SYMBOL	DESCRIPTION	SPECIFICATION
	CEILING MOUNTED FIXTURE; DRAWN TO SCALE	SEE LIGHTING FIXTURE SCHEDULE
	WALL MOUNTED FIXTURE	SEE LIGHTING FIXTURE SCHEDULE
	CEILING MOUNTED FIXTURE	SEE LIGHTING FIXTURE SCHEDULE
	EXIT SIGN; WALL MOUNTED; SHADED REGION INDICATES ILLUMINATED FACE; ARROW INDICATES DIRECTIONAL ARROW	SEE LIGHTING FIXTURE SCHEDULE

DESIGNATION	DESCRIPTION	SPECIFICATION
DL a	"DL" REPRESENTS FIXTURE IDENTIFIER. LOWERCASE LETTER "a" INDICATES SWITCHING ZONE.	REFER TO LIGHTING FIXTURE SCHEDULE. REFER TO LIGHTING CONTROLS MATRIX / SEQUENCE OF OPERATIONS.
	SHADED CENTER OF FIXTURE REPRESENTS FIXTURE FOR EMERGENCY EGRESS LIGHTING.	REFER TO LIGHTING FIXTURE SCHEDULE. REFER TO LIGHTING CONTROL DETAILS.

LIGHTING FIXTURE NOTES

1. LIGHTING FIXTURE SYMBOLS REPRESENT THE GENERAL SIZE AND SHAPE OF THE FIXTURE, BUT ARE NOT MEANT TO BE TO-SCALE REPRESENTATIONS UNLESS NOTED OTHERWISE. THE SYMBOLS LISTED IN THE ABOVE LEGEND ARE TYPICAL BUT MAY NOT REPRESENT ALL SYMBOLS SHOWN ON THE PLANS. REFER TO THE LIGHTING FIXTURE SCHEDULE FOR FIXTURE INFORMATION.
2. LOCATION OF LIGHTING FIXTURES IN MECHANICAL EQUIPMENT ROOM SHALL BE COORDINATED WITH THE FINAL MECHANICAL EQUIPMENT LOCATION INCLUDING AC EQUIPMENT, PUMPS, DUCTWORK, PIPE, ETC. TO PROVIDE NEC REQUIRED ACCESS SPACE AND PROPER ILLUMINATION.
3. ALL EXIT SIGNS AND FIXTURES WITH INTEGRAL BATTERY BACKUP SHALL BE CONNECTED TO THE LIGHT CIRCUIT AHEAD OF LOCAL SWITCH CONTROL.

LIGHTING CONTROLS

SYMBOL	DESCRIPTION	SPECIFICATION
RC	LIGHTING CONTROLS ROOM CONTROLLER. INSTALL CONCEALED ABOVE ACCESSIBLE CEILING UNLESS NOTED OTHERWISE.	WATTSTOPPER LMRC-111, OR EQUIVALENT. SEE DETAILS.
OS	LIGHTING CONTROLS MOTION SENSOR; CEILING MOUNTED; PROGRAMMED FOR OCCUPANCY SENSING.	WATTSTOPPER LMDC-100, SEE DETAILS.
$LX	LOW VOLTAGE SWITCH. "X" INDICATES BUTTON COUNT.	WATTSTOPPER LMSW-SERIES. SEE DETAILS.
$	SINGLE POLE TOGGLE SWITCH	HUBBELL SERIES HBL1221
$3	3-WAY TOGGLE SWICH	HUBBELL SERIES HBL1223
$4	4-WAY TOGGLE SWITCH	HUBBELL SERIES HBL1224
$OS	WALL SWITCH WITH MOTION SENSOR; PROGRAM FOR OCCUPANCY SENSING.	WATTSTOPPER #DWS-301-W

LIGHTING CONTROL NOTES

1. REFER TO LIGHTING CONTROL MATRIX / SEQUENCE OF OPERATIONS TABLE FOR PROGRAMMING OF LIGHTING CONTROLS.
2. REFER TO LIGHTING CONTROL DETAILS FOR TYPICAL WIRING OF CONTROLS, LOW VOLTAGE NETWORKING OF CONTROLS, AND BASIS OF DESIGN EQUIPMENT SPECIFICATIONS.
3. ALL LIGHTING CONTROL SWITCHES SHALL BE MOUNTED 48" AFF TO C/L UNLESS NOTED OTHERWISE.

POWER DEVICES

SYMBOL	DESCRIPTION	SPECIFICATION
	JUNCTION BOX WALL MOUNTED	THOMAS & BETTS 52171, OR EQUAL.
	JUNCTION BOX ABOVE CEILING	THOMAS & BETTS 52171, OR EQUAL.
	RED MUSHROOM EMERGENCY STOP; MAINTAINED PUSH AND KEY RELEASE; LABEL 'EMERGENCY STOP'	SQUARE D MODEL XB6AS9345B. SEE DETAILS.
$2P	2 POLE, 600V, 30A TOGGLE DISCONNECT SWITCH WITH LOCKABLE ENCLOSURE	HUBBELL BRYANT 30102D

DESIGNATION	DESCRIPTION	SPECIFICATION
"XX"	"XX" INDICATES TYPE OF EQUIPMENT TO BE POWERED. EQUIPMENT TYPES: DDC = HVAC CONTROL PANEL, DDC ACP = ACCESS CONTROL PANEL AV = AUDIO VISUAL EQUIPMENT POWER	

POWER DEVICE NOTES

1. FOR TOGGLE SWITCH USED AS EQUIPMENT DISCONNECT, ELECTRICAL PLANS INDICATING DEVICES MOUNTED TO EQUIPMENT IS DIAGRAMMATIC ONLY AND THE FINAL LOCATION OF DEVICES SHALL BE DETERMINED BY THE ELECTRICAL CONTRACTOR. COORDINATE DEVICE MOUNTED TO EQUIPMENT SPECIFIED AND PROVIDED UNDER OTHER SECTIONS WITH INSTALLING CONTRACTOR AND THE SPECIFYING ENGINEER.

LIGHTNING PROTECTION

SYMBOL	DESCRIPTION	SPECIFICATION
	LIGHTNING PROTECTION SYSTEM AIR TERMINAL, 5/8" DIA X10" HIGH MIN.	REFER TO DETAILS.
	LIGHTNING PROTECTIONS SYSTEM ROOF CONDUCTOR, #3/0 COPPER OR. 250MCM ALUMINUM	REFER TO DETAILS.
	LIGHTNING PROTECTION SYSTEM DOWN CONDUCTOR, #3/0 COPPER AND 3/4" DIA X 20 FT MIN. COPPER CLAD STEEL SECTIONAL DRIVEN GROUND ROD	REFER TO DETAILS.
	LIGHTNING PROTECTION SYSTEM GROUND ROD	REFER TO DETAILS.

DAG ARCHITECTS
DAG Architects AR0009694
455 Harrison Ave Suite I Panama City, FL 32401
850.387.1671
www.DAGarchitects.com

BID DOCUMENTS

HCA FLORIDA GULF COAST HOSPITAL
Outpatient Rehabilitation & Diagnostic Center
DIAGNOSTICS MRI
ADDITION
2024 STATE STREET, PANAMA CITY, FL 32405

HCA Florida
Gulf Coast Hospital

REVISIONS:

No.	Description	Date
1	Addendum 1	04/22/2025

LEGEND AND NOTES

PROJECT NUMBER	24107
DATED	03/28/2025

E-002

HG ENGINEERS
HG Engineers
621 N Tyndall Pkwy, Suite C
Panama City, FL 32404
E-mail: office@hgengineers.com
Ph: 850.243.6723
Fl. Authorization No.00006680
Christopher A. Garick; FL. PE No.53924
Thomas A. Alexander; FL. PE No.73172
Daniel J. White; FL. PE No.73790
Caleb W. Leonard; FL. PE No.91782
24110 Job No.

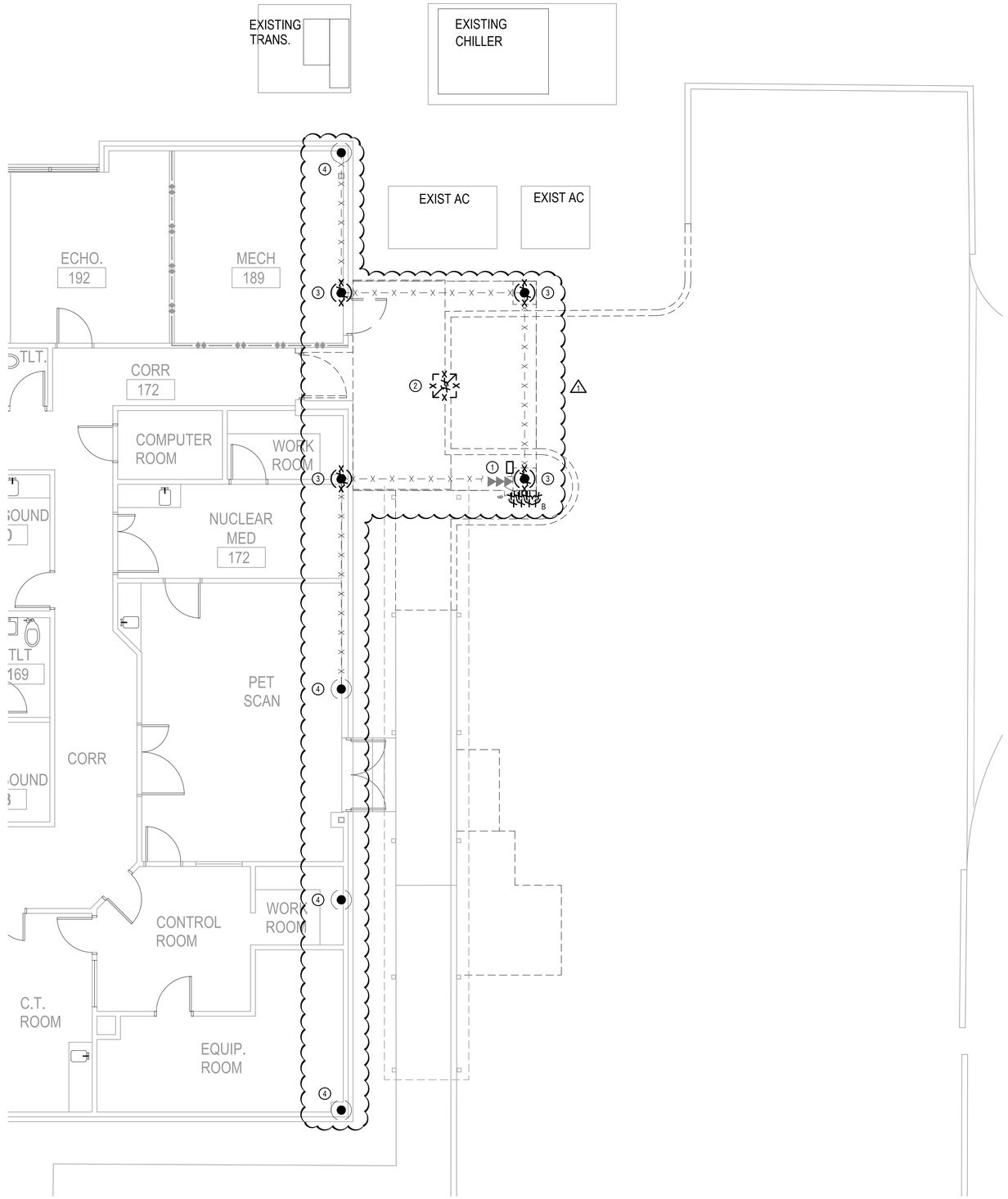

KEYNOTES

1. EXISTING MOBILE MRI RECEPTACLE AND ASSOCIATED ELECTRICAL AND DATA OUTLETS SHALL BE RELOCATED OUT OF THE FOOTPRINT OF THE NEW CONSTRUCTION. PRESERVE EXISTING DISCONNECT AND MRI RECEPTACLE; ALL OTHER OUTLETS ARE TO BE DEMOLISHED AND REPLACED. EXISTING CONDUITS SHALL BE TRACED BACK TO WHERE THEY EXIT THE BUILDING, INTERCEPTED, AND EXTENDED TO NEW LOCATION. REFER TO NEW CONSTRUCTION DRAWINGS FOR ADDITIONAL DETAILS.
2. DEMOLISH EXISTING CANOPY FIXTURE. REMOVE EXISTING CONDUIT AND CIRCUITRY BACK TO NEAREST JUNCTION BOX WITHIN EXISTING BUILDING.
3. EXISTING LIGHTNING PROTECTION AIR TERMINAL TO BE DEMOLISHED AND ASSOCIATED CABLING TO BE REMOVED BACK TO NEAREST EXISTING AIR TERMINAL.
4. EXISTING LIGHTNING PROTECTION AIR TERMINAL AND ASSOCIATED CABLING TO BE PRESERVED FOR TIE-IN WITH NEW INSTALLATION. REFER TO NEW CONSTRUCTION SHEET FOR NEW ROOF LAYOUT.

E-101 | FLOOR PLAN - DEMO
SCALE: 3/16" = 1'-0"

HG Engineers
621 N Tyndall Pkwy, Suite C
Panama City, FL 32404
E-mail: office@hgengineers.com
Ph: 850.243.6723
Fl. Authorization No.00006680
Christopher A. Garick; FL. PE No.53924
Thomas A. Alexander; FL. PE No.73172
Daniel J. White; FL. PE No.73790
Caleb W. Leonard; FL. PE No.91782

24110
Job No.

DAG ARCHITECTS
DAG Architects AR0009694
455 Harrison Ave Suite I Panama City, FL 32401
850.387.1671
www.DAGarchitects.com

BID DOCUMENTS

HCA FLORIDA GULF COAST HOSPITAL
Outpatient Rehabilitation & Diagnostic Center
DIAGNOSTICS MRI ADDITION
2024 STATE STREET, PANAMA CITY, FL 32405

HCA Florida
Gulf Coast Hospital

REVISIONS:

No.	Description	Date
1	Addendum 1	04/22/2025

FLOOR PLAN - DEMO

PROJECT NUMBER	24107
DATED	03/28/2025

E-101

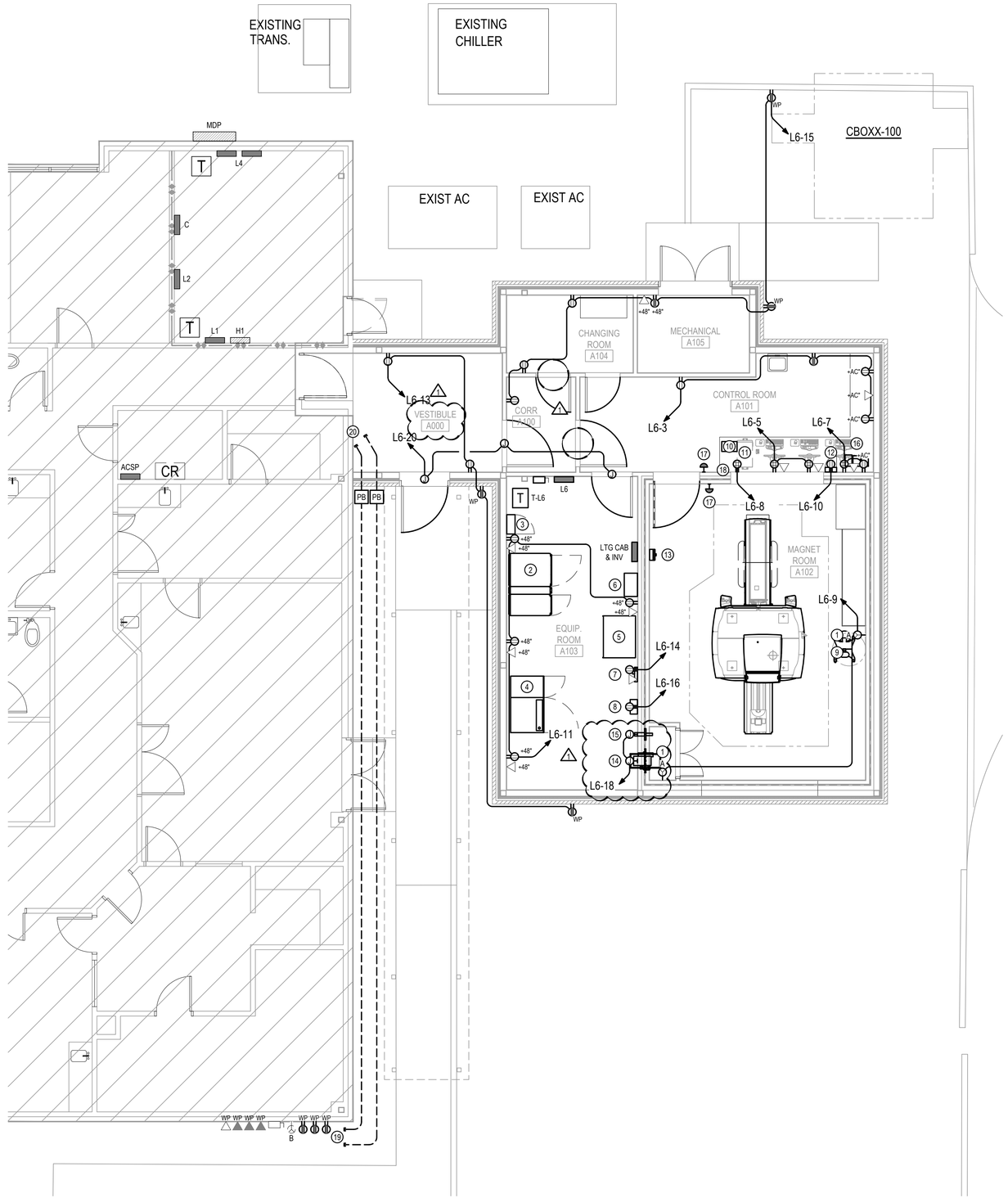

NORTH

GENERAL NOTES

1. COORDINATE ALL INSTALLATIONS WITHIN MAGNET ROOM WITH RF SHIELDING INSTALLER. ENSURE NECESSARY FILTERS AND NON-FERROUS CONSTRUCTION IS UTILIZED. PROVIDE LEAD SHEATHING FOR ANY ELECTRICAL INSTALLATION WITHIN RF SHIELDED WALLS AND ELSEWHERE DEEMED NECESSARY.
2. COORDINATE ALL INSTALLATION WITH GE HEALTHCARE DRAWINGS TO INCLUDE ANY ADDITIONAL REQUIREMENTS OUTLINED IN THOSE DOCUMENTS THAT HAVE OTHERWISE NOT BEEN CAPTURED WITHIN THESE SHEETS.
3. UNLESS OTHERWISE NOTED, THE EC SHALL PROVIDE ALL NECESSARY CONDUIT AND/OR CABLE TRAY BETWEEN PIECES OF GE HEALTHCARE EQUIPMENT REGARDLESS OF THE EQUIPMENT INSTALLER. THE EC SHALL ALSO PROVIDE THE NECESSARY POWER AND/OR CONTROL CABLING WHERE INDICATED BY GE HEALTHCARE.

KEYNOTES

1. CONVENIENCE OUTLET IN MAGNET ROOM MUST BE FOR SERVICE ONLY PER AHCA REQUIREMENTS. PROVIDE PERMANENT RED ENGRAVED LABEL WITH WHITE LETTERING STATING "FOR SERVICE ONLY." PROVIDE ETS-LINDGREN LRE-2030 POWER FILTER, OR EQUIVALENT, FOR CIRCUIT PRIOR TO ENTERING RF SHIELD. ENSURE NON-FERROUS MATERIALS ARE UTILIZED WITHIN MAGNET ROOM AND PROVIDE LEAD LINING FOR ANY ELECTRICAL INSTALLATION WITHIN RF SHIELDING WALL.
2. EATON 93PM UNINTERRUPTIBLE POWER SUPPLY SUPPLIED BY GEHC AND INSTALLED BY EC.
3. MRI MAIN DISCONNECT PANEL (MDP) SUPPLIED BY GEHC AND INSTALLED BY EC. REFER TO THE RISER AND DETAILS FOR ADDITIONAL INFORMATION AND INTERCONNECTIONS.
4. POWER, GRADIENT, RF CABINET (PGR) SUPPLIED AND INSTALLED BY GEHC. REFER TO THE RISER AND DETAILS FOR ADDITIONAL INFORMATION AND INTERCONNECTIONS.
5. INTEGRATED COOLING CABINET (ICC) SUPPLIED AND INSTALLED BY GEHC. REFER TO THE RISER AND DETAILS FOR ADDITIONAL INFORMATION AND INTERCONNECTIONS.
6. CHILLER INTERFACE PANEL (CIP) TO BE SUPPLIED BY GEHC AND INSTALLED BY MECHANICAL CONTRACTOR. NO ELECTRICAL CONNECTION REQUIRED.
7. MAGNET MONITOR (MON) SUPPLIED AND INSTALLED BY GEHC. INTERCONNECT WITH MRI MAGNET, PGR, AND ICC THROUGH GEHC SUPPLIED CABLING. ROUTE MAGNET ROOM CABLING THROUGH PENETRATION PANEL. MOUNT POWER OUTLET AT HEIGHT RECOMMENDED BY MANUFACTURER. REFER TO DETAILS FOR ADDITIONAL INFORMATION.
8. INJECTOR POWER SUPPLY (IPS) SUPPLIED BY BAYER AND INSTALLED BY EC. INTERCONNECT WITH INJECTOR HEAD THROUGH MANUFACTURER RECOMMENDED CABLING. ROUTE MAGNET ROOM CABLING THROUGH BAYER PENETRATION PANEL. REFER TO DETAILS FOR ADDITIONAL INFORMATION.
9. INJECTOR HEAD ON PEDESTAL (IHP) SUPPLIED AND INSTALLED BY BAYER. INTERCONNECT WITH INJECTOR POWER SUPPLY AND INJECTOR CONTROL THROUGH MANUFACTURER RECOMMENDED CABLING. ROUTE MAGNET ROOM CABLING THROUGH BAYER PENETRATION PANEL. REFER TO DETAILS FOR ADDITIONAL INFORMATION. COORDINATE WITH BAYER FOR EXACT INSTALLATION LOCATION.
10. INJECTOR CONTROLLER (IC) SUPPLIED AND INSTALLED BY BAYER. INTERCONNECT WITH INJECTOR HEAD ON PEDESTAL IN MAGNET ROOM VIA MANUFACTURER RECOMMENDED CABLING. ROUTE MAGNET ROOM CABLING THROUGH BAYER PENETRATION PANEL. REFER TO DETAILS FOR ADDITIONAL INFORMATION.
11. GLOBAL OPERATOR CONSOLE (GOC) SUPPLIED AND INSTALLED BY GEHC. INTERCONNECT WITH MRI MAGNET AND PGR THROUGH GEHC SUPPLIED CABLING. ROUTE MAGNET ROOM CABLING THROUGH PENETRATION PANEL.
12. REMOTE CONTROL PANEL (RCP) SUPPLIED BY GEHC AND INSTALLED BY EC. PROVIDE ONE (1) 1" CONDUIT WITH MANUFACTURER RECOMMENDED CABLING TO NEW CBOXX-100 CHILLER.
13. MAGNET RUNDOWN UNIT (MRU) SUPPLIED AND INSTALLED BY GEHC. INTERCONNECT WITH MRI MAGNET VIA GEHC SUPPLIED CABLING.
14. PENETRATION PANEL (PP) SUPPLIED AND INSTALLED BY GEHC. REFER DETAILS FOR ADDITIONAL INFORMATION AND INTERCONNECTIONS.
15. PENETRATION PANEL (BPP) SUPPLIED AND INSTALLED BY BAYER. REFER DETAILS FOR ADDITIONAL INFORMATION AND INTERCONNECTIONS. COORDINATE WITH BAYER FOR EXACT INSTALLATION LOCATION.
16. MUSIC SYSTEM (MS) SUPPLIED AND INSTALLED BY GEHC. INTERCONNECT WITH WITH MRI MAGNET THROUGH GEHC SUPPLIED CABLING. ROUTE MAGNET ROOM CABLING THROUGH PENETRATION PANEL. REFER TO DETAILS FOR ADDITIONAL INFORMATION.
17. EMERGENCY OFF BUTTON SUPPLIED BY GEHC AND INSTALLED BY EC. INTERCONNECT WITH MRI MDP FOR REMOVAL OF ALL POWER UPON ACTIVATION. ROUTE MAGNET ROOM CABLING THROUGH PENETRATION PANEL. REFER TO DETAILS FOR ADDITIONAL INFORMATION.
18. PROVIDE ONE (1) 2" AND ONE (1) 3" CONDUITS WITH PULLSTRING FROM THE ENDPOINT OF THE EQUPMENT ROOM CABLE TRAY TO THIS LOCATION. CONDUITS SHALL NOT PENETRATE THE RF SHIELD. TERMINATE CONDUITS AT A JUNCTION BOX ABOVE THE CEILING. PROVIDE SURFACE MOUNT WALL DUCT WITH TWO (2) DIVIDERS (6" x 3-1/2") DOWN FROM THE JUNCTION BOX TO THE GROMMETED OPENING OF THE OPERATORS CONSOLE. REFER TO GEHC DRAWINGS FOR ADDITIONAL DETAILS, INCLUDING CONDUIT ROUTING.
19. RELOCATE EXISTING MRI RECEPTACLE AND 200A DISCONNECT TO THIS LOCATION. PROVIDE NEW DEVICES AS SHOWN. ALL DEVICES SHALL BE MOUNTED AT APPROXIMATELY THE SAME HEIGHT AS THEY PREVIOUSLY WERE.
20. APPROXIMATE LOCATION TO INTERCEPT EXISTING CONDUITS TO MOBILE MRI RECEPTACLE AND ASSOCIATED DEVICES. PROVIDE ONE PULLBOX FOR POWER AND ANOTHER FOR DATA. EXTEND TO NEW LOCATION AS SHOWN. EC TO FIELD VERIFY EXISTING CONDITIONS TO DETERMINE TOTAL NUMBER OF CONDUITS, CIRCUITS, AND SIZE OR WIRE. COORDINATE EXCAVATION WITH OWNER TO IMPACT EXISTING BUSHES AS POSSIBLE.

E-111 | FLOOR PLAN - POWER
SCALE: 3/16" = 1'-0"

HG Engineers
621 N Tyndall Pkwy, Suite C
Panama City, FL 32404
E-mail: office@hgengineers.com
Ph: 850.243.6723
FL Authorization No.00006680
Christopher A. Garick; FL. PE No.53924
Thomas A. Alexander; FL. PE No.73172
Daniel J. White; FL. PE No.73790
Caleb W. Leonard; FL. PE No.91782

24110
Job No.

DAG ARCHITECTS
DAG Architects AR0009694
455 Harrison Ave Suite I Panama City, FL 32401
850.387.1671
www.DAGarchitects.com

BID DOCUMENTS

HCA FLORIDA GULF COAST HOSPITAL
Outpatient Rehabilitation & Diagnostic Center
DIAGNOSTICS MRI ADDITION
2024 STATE STREET, PANAMA CITY, FL 32405

HCA Florida
Gulf Coast Hospital

REVISIONS:

No.	Description	Date
1	Addendum 1	04/22/2025

FLOOR PLAN - POWER

PROJECT NUMBER	24107
DATED	03/28/2025

E-111

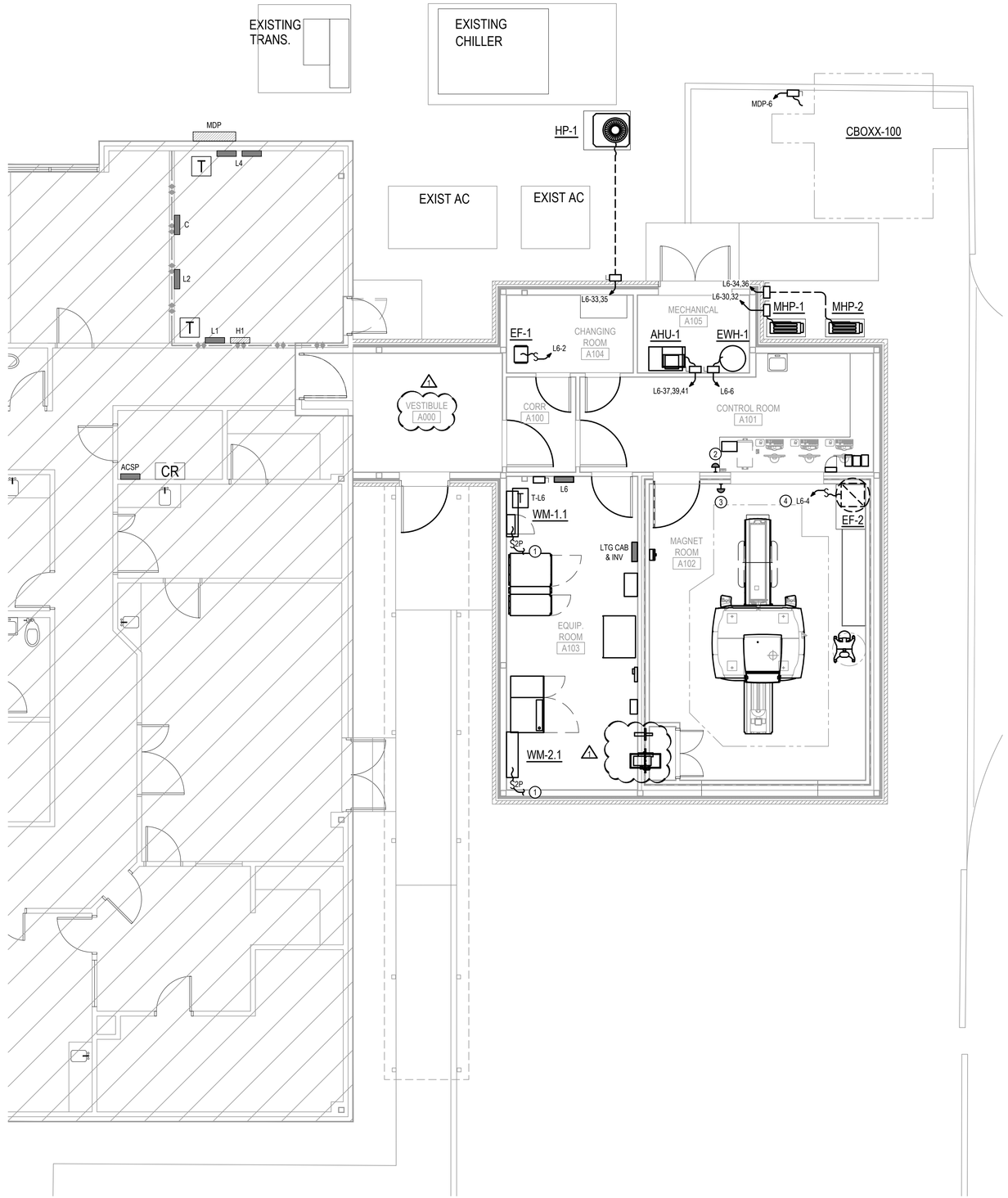

NORTH

GENERAL NOTES

1. COORDINATE ALL INSTALLATIONS WITHIN MAGNET ROOM WITH RF SHIELDING INSTALLER. ENSURE NECESSARY FILTERS AND NON-FERROUS CONSTRUCTION IS UTILIZED. PROVIDE LEAD SHEATHING FOR ANY ELECTRICAL INSTALLATION WITHIN RF SHIELDED WALLS AND ELSEWHERE DEEMED NECESSARY.
2. COORDINATE ALL INSTALLATION WITH GE HEALTHCARE DRAWINGS TO INCLUDE ANY ADDITIONAL REQUIREMENTS OUTLINED IN THOSE DOCUMENTS THAT HAVE OTHERWISE NOT BEEN CAPTURED WITHIN THESE SHEETS.
3. UNLESS OTHERWISE NOTED, THE EC SHALL PROVIDE ALL NECESSARY CONDUIT AND/OR CABLE TRAY BETWEEN PIECES OF GE HEALTHCARE EQUIPMENT REGARDLESS OF THE EQUIPMENT INSTALLER. THE EC SHALL ALSO PROVIDE THE NECESSARY POWER AND/OR CONTROL CABLING WHERE INDICATED BY GE HEALTHCARE.

KEYNOTES

1. INDOOR UNIT TO RECEIVE POWER FROM RESPECTIVE OUTDOOR UNIT.
2. INTERLOCK PUSH BUTTON WITH EXAHUST FAN EF-2 FOR ACTIVATION UPON PRESS. PROVIDE PILLA ST120SL WITH "EMERGENCY VENTILATION START" LABEL AND PILCHOV1 CLEAR COVER. BUTTON SHALL OPERATE IN PARALLEL WITH MAGNET ROOM BUTTON; PROVIDE ANY ADDITIONAL SETS ON CONTACTS, AS NEEDED.
3. INTERLOCK PUSH BUTTON WITH EXAHUST FAN EF-2 FOR ACTIVATION UPON PRESS. PROVIDE NON-FERROUS PUSH BUTTON EQUAL TO PILLA ST120SL WITH "EMERGENCY VENTILATION START" LABEL AND PILCHOV1 CLEAR COVER. BUTTON SHALL OPERATE IN PARALLEL WITH CONTROL ROOM BUTTON; PROVIDE ANY ADDITIONAL SETS ON CONTACTS, AS NEEDED.
4. PROVIDE ETS-LINDGREN LRE-2030 POWER FILTER, OR EQUIVALENT, FOR CIRCUIT PRIOR TO ENTERING RF SHIELD. ENSURE NON-FERROUS MATERIALS ARE UTILIZED WITH MAGNET ROOM.

DAG ARCHITECTS
DAG Architects AR0009694
455 Harrison Ave Suite I Panama City, FL 32401
850.387.1671
www.DAGarchitects.com

BID DOCUMENTS

HCA FLORIDA GULF COAST HOSPITAL
Outpatient Rehabilitation & Diagnostic Center
DIAGNOSTICS MRI ADDITION
2024 STATE STREET, PANAMA CITY, FL 32405

HCA Florida
Gulf Coast Hospital

REVISIONS:

No.	Description	Date
1	Addendum 1	04/22/2025

FLOOR PLAN - MECH POWER

PROJECT NUMBER	24107
DATED	03/28/2025

1 E-112

E-112 | FLOOR PLAN - MECH POWER
SCALE: 3/16" = 1'-0"

HG Engineers
621 N Tyndall Pkwy, Suite C
Panama City, FL 32404
E-mail: office@hgengineers.com
Ph: 850.243.6723
Fl. Authorization No.00006680
Christopher A. Garick; FL. PE No.53924
Thomas A. Alexander; FL. PE No.73172
Daniel J. White; FL. PE No.73790
Caleb W. Leonard; FL. PE No.91782

24110 Job No.

22017
CONSTRUCTION DWGS
2025-04-25

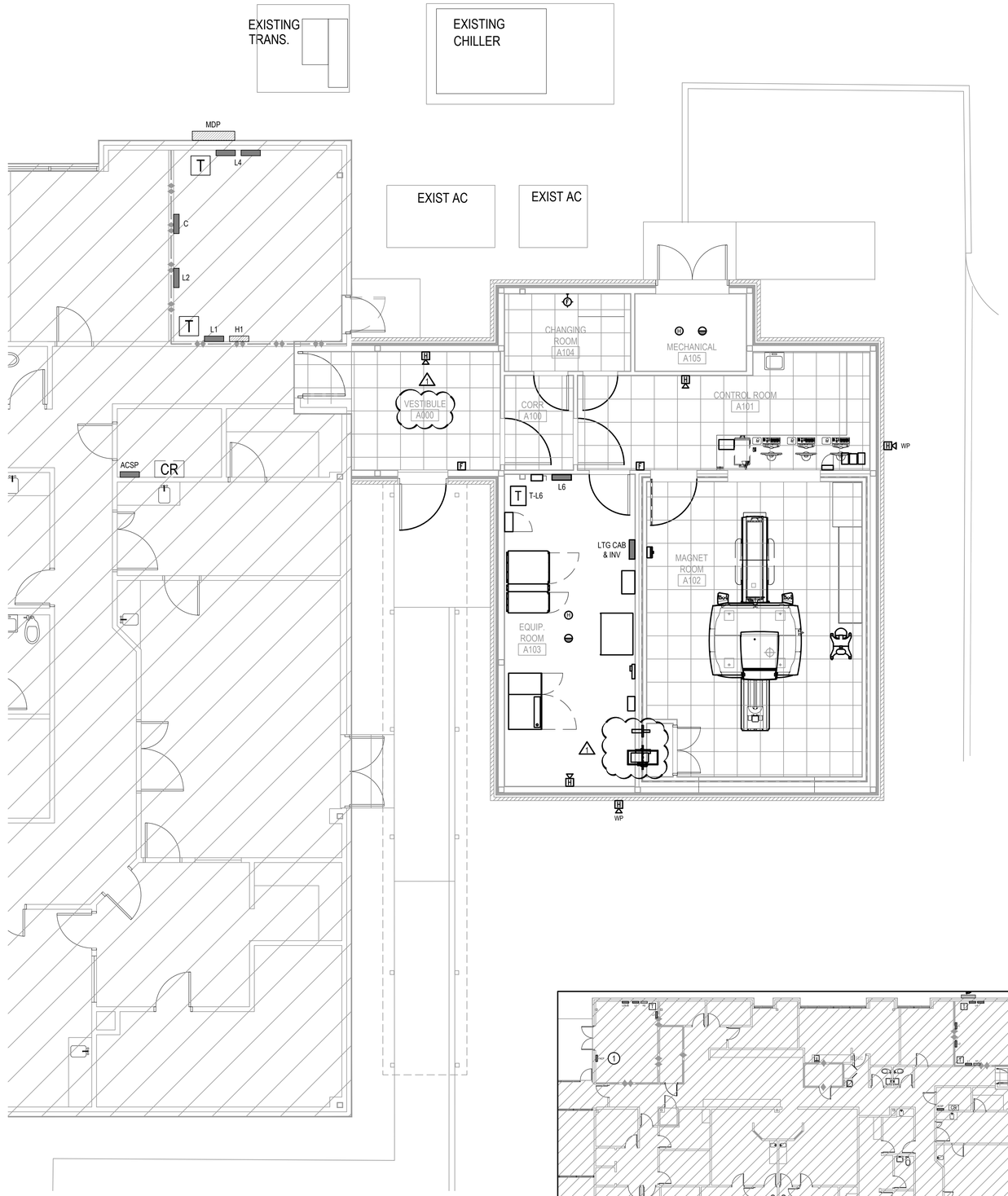

GENERAL NOTES

1. COORDINATE ALL INSTALLATIONS WITHIN MAGNET ROOM WITH RF SHIELDING INSTALLER. ENSURE NECESSARY FILTERS AND NON-FERROUS CONSTRUCTION IS UTILIZED. PROVIDE LEAD SHEATHING FOR ANY ELECTRICAL INSTALLATION WITHIN RF SHIELDED WALLS AND ELSEWHERE DEEMED NECESSARY.
2. COORDINATE ALL INSTALLATION WITH GE HEALTHCARE DRAWINGS TO INCLUDE ANY ADDITIONAL REQUIREMENTS OUTLINED IN THOSE DOCUMENTS THAT HAVE OTHERWISE NOT BEEN CAPTURED WITHIN THESE SHEETS.
3. UNLESS OTHERWISE NOTED, THE EC SHALL PROVIDE ALL NECESSARY CONDUIT AND/OR CABLE TRAY BETWEEN PIECES OF GE HEALTHCARE EQUIPMENT REGARDLESS OF THE EQUIPMENT INSTALLER. THE EC SHALL ALSO PROVIDE THE NECESSARY POWER AND/OR CONTROL CABLING WHERE INDICATED BY GE HEALTHCARE.

KEYNOTES

1. LOCATION OF EXISTING FIRE-LITE MS-5UD-3 FIRE ALARM CONTROL PANEL (FACP). ENSURE ALL NEW DEVICES ARE COMPATIBLE WITH EXISTING SYSTEM.

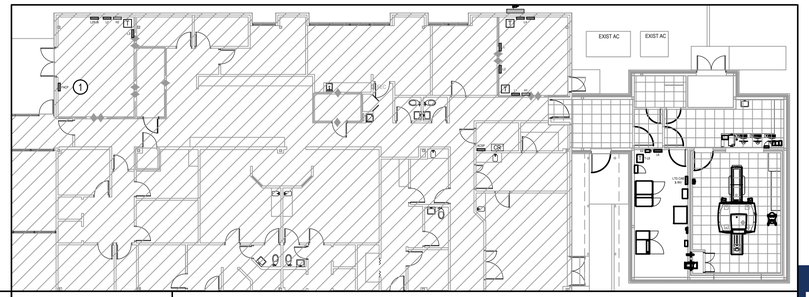

E-113	FLOOR PLAN - FIRE ALARM
SCALE: 3/16" = 1'-0"	

E-113	FLOOR PLAN - FIRE ALARM KEY PLAN
SCALE: 1/16" = 1'-0"	

HG Engineers
621 N Tyndall Pkwy, Suite C
Panama City, FL 32404
E-mail: office@hgengineers.com
Ph: 850.243.6723
Fl. Authorization No.00006680
Christopher A. Garick; FL. PE No.53924
Thomas A. Alexander; FL. PE No.73172
Daniel J. White; FL. PE No.73790
Caleb W. Leonard; FL. PE No.91782

24110
Job No.

DAG ARCHITECTS
DAG Architects AR0009694
455 Harrison Ave Suite I Panama City, FL 32401
850.387.1671
www.DAGarchitects.com

BID DOCUMENTS

HCA FLORIDA GULF COAST HOSPITAL
Outpatient Rehabilitation & Diagnostic Center
DIAGNOSTICS MRI
ADDITION
2024 STATE STREET, PANAMA CITY, FL 32405

HCA Florida
Gulf Coast Hospital

REVISIONS:

No.	Description	Date
1	Addendum 1	04/22/2025

FLOOR PLAN - FIRE ALARM

PROJECT NUMBER	24107
DATED	03/28/2025

1 E-113

22017
CONSTRUCTION DWGS
2025-04-25

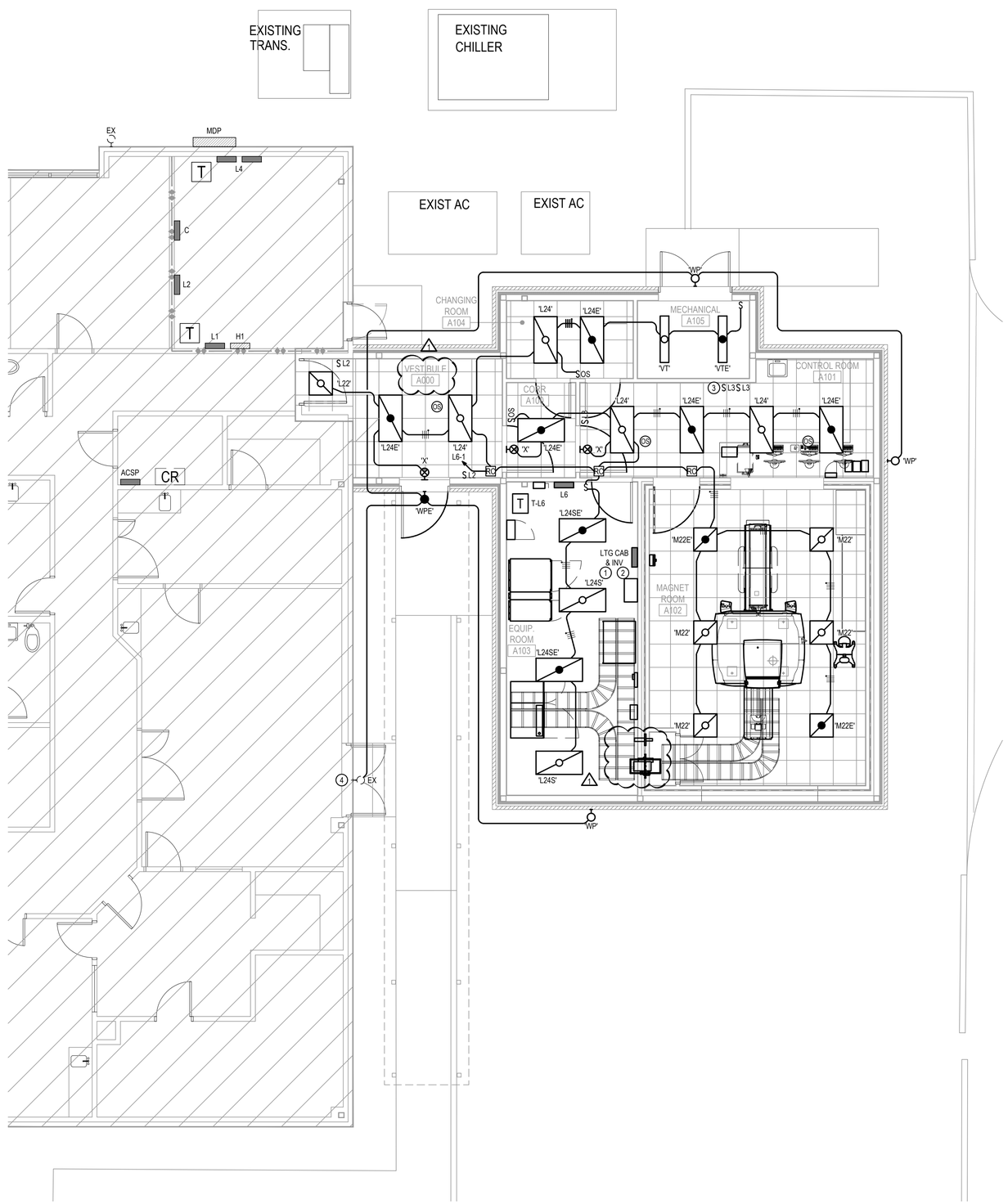

NORTH

GENERAL NOTES

1. COORDINATE ALL INSTALLATIONS WITHIN MAGNET ROOM WITH RF SHIELDING INSTALLER. ENSURE NECESSARY FILTERS AND NON-FERROUS CONSTRUCTION IS UTILIZED. PROVIDE LEAD SHEATHING FOR ANY ELECTRICAL INSTALLATION WITHIN RF SHIELDED WALLS AND ELSEWHERE DEEMED NECESSARY.
2. COORDINATE ALL INSTALLATION WITH GE HEALTHCARE DRAWINGS TO INCLUDE ANY ADDITIONAL REQUIREMENTS OUTLINED IN THOSE DOCUMENTS THAT HAVE OTHERWISE NOT BEEN CAPTURED WITHIN THESE SHEETS.
3. UNLESS OTHERWISE NOTED, THE EC SHALL PROVIDE ALL NECESSARY CONDUIT AND/OR CABLE TRAY BETWEEN PIECES OF GE HEALTHCARE EQUIPMENT REGARDLESS OF THE EQUIPMENT INSTALLER. THE EC SHALL ALSO PROVIDE THE NECESSARY POWER AND/OR CONTROL CABLING WHERE INDICATED BY GE HEALTHCARE.

KEYNOTES

1. ALL DRIVERS FOR FIXTURES LOCATED IN THE MAGNET ROOM SHALL BE INSTALLED WITHIN THIS CABINET. ALL WIRING SHALL PASS THROUGH THE SPECIFIED KIRLIN RF FILTER PRIOR TO ENTERING THE MAGNET ROOM. REFER TO THE LIGHTING SCHEDULE FOR ADDITIONAL DETAILS.
2. LIGHTING INVERTER IS TO BE INSTALLED BENEATH DRIVER CABINET AND WIRED TO SUPPLY POWER TO THE DRIVERS CONTROLLING THE INDICATED FIXTURES. REFER TO THE LIGHTING SCHEDULE FOR ADDITIONAL INFORMATION.
4. ONE (1) SWITCH SHALL CONTROL THE LIGHTING IN THE OPERATOR'S ROOM WHILE THE OTHER SHALL CONTROL THE LIGHTING IN THE MAGNET ROOM. PROVIDE ETS-LINDGREN LTC-2640 SERIES RF FILTER PRIOR TO ENTERING THE MAGNET ROOM WITH ANY CONTROL CABLES.
5. TIE NEW WALLPACKS INTO EXISTING EXTERIOR LIGHTING CIRCUIT FOR POWER AND CONTROL.

DAG ARCHITECTS
DAG Architects AR0009694
455 Harrison Ave Suite I Panama City, FL 32401
850.387.1671
www.DAGarchitects.com

BID DOCUMENTS

HCA FLORIDA GULF COAST HOSPITAL
Outpatient Rehabilitation & Diagnostic Center
DIAGNOSTICS MRI ADDITION
2024 STATE STREET, PANAMA CITY, FL 32405

HCA Florida
Gulf Coast Hospital

REVISIONS:

No.	Description	Date
1	Addendum 1	04/22/2025

FLOOR PLAN - LIGHTING

PROJECT NUMBER	24107
DATED	03/28/2025

E-114

E-114 FLOOR PLAN - LIGHTING
SCALE: 3/16" = 1'-0"

HG Engineers
621 N Tyndall Pkwy, Suite C
Panama City, FL 32404
E-mail: office@hgengineers.com
Ph: 850.243.6723
Fl. Authorization No.00006680
Christopher A. Garick; FL. PE No.53924
Thomas A. Alexander; FL. PE No.73172
Daniel J. White; FL. PE No.73790
Caleb W. Leonard; FL. PE No.91782

24110
Job No.

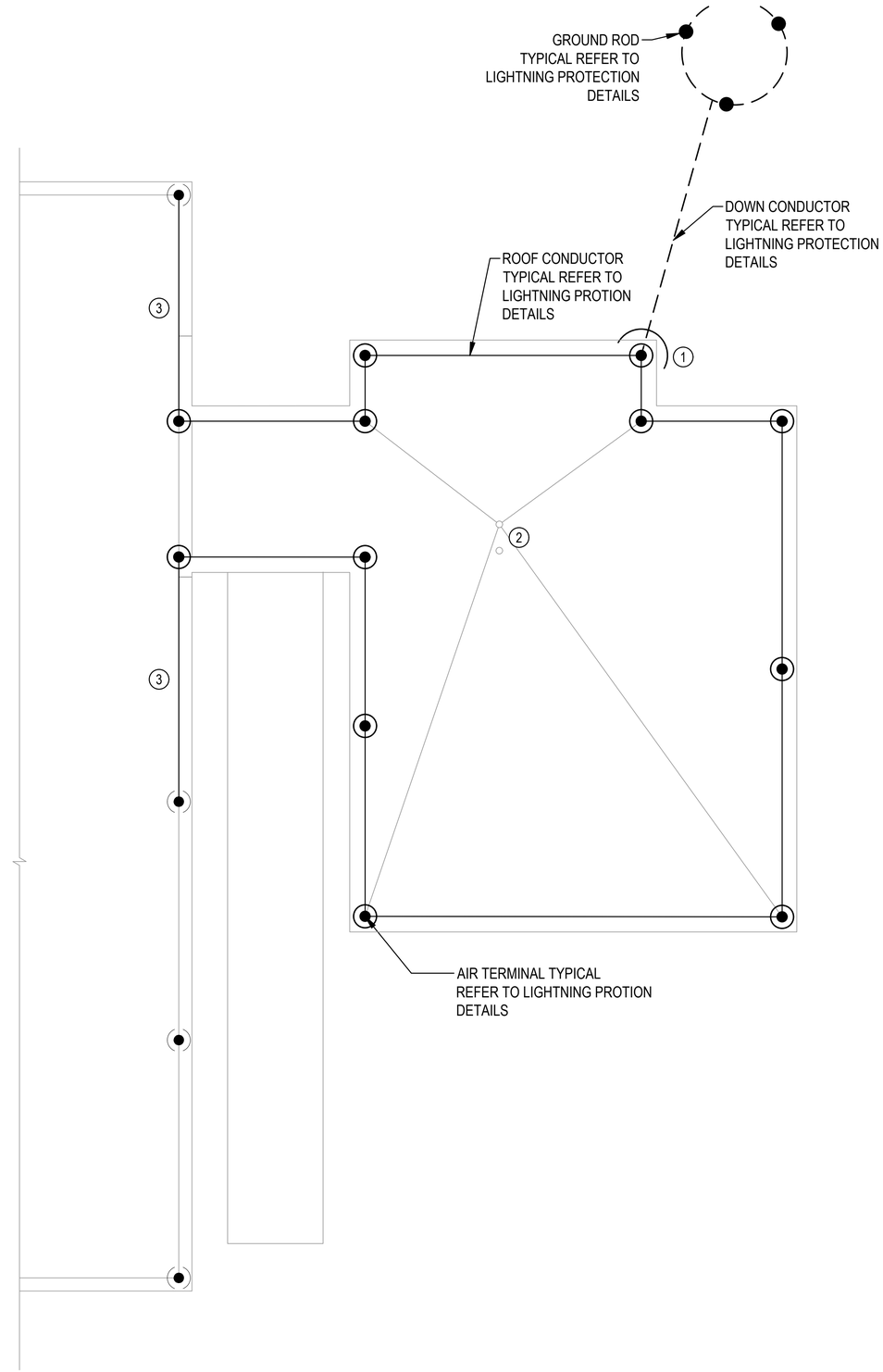

GENERAL NOTES

1. BOND TO METAL BODIES OF CONDUCTANCE ON ROOF WITH MAIN SIZE CONDUCTORS AS REQUIRED BY NFPA, U.L. AND ETL CODES. THESE BONDS INCLUDE BUT ARE NOT LIMITED TO EXHAUST FANS, VENTS, HANDRAILS, METAL SCREENS AND PANELS, H.V.A.C. UNITS, HATCHES, SKYLIGHTS, COOLING TOWERS, FLAG POLES, ANTENNAS, ETC. OR ANY LARGE METAL BODY SUBJECTS TO DIRECT STROKE OR WHICH EXCEEDS THE HEIGHT OF ADJACENT AIR TERMINALS.
2. ALUMINUM MATERIALS SHALL NOT BE USED IN DIRECT CONTACT WITH EARTH CONNECTION OF ALUMINUM DOWN CONDUCTORS TO COPPER SHALL BE MADE AT A POINT NO LESS THAN 1 FOOT ABOVE GRADE LEVEL. FITTINGS CONNECTING THE ALUMINUM DOWN CONDUCTORS TO COPPER SHALL BE OF THE BIMETALLIC TYPE DISSIMILAR METALS. REFER TO SPECIFICATIONS.
3. CONNECT LIGHTNING PROTECTION SYSTEM TO MAIN GROUND BAR. SEE GROUNDING DETAILS.
4. COORDINATE INSTALLATION WITH SITE WORK. DO NOT DISTURB FINISHED SITE WORK, LANDSCAPING, AND/OR NEW SOD INSTALLATION.
5. INSTALL U.L. LISTED LIGHTNING PROTECTION SYSTEM PER THE LIGHTNING PROTECTION INSTITUTE (LP) STANDARDS. INSTALLATION MUST BEAR U.L. MASTER LABEL

KEYNOTES

1. UP/DN CONDUCTOR BOND TO DOWN CONDUCTOR.
2. ROOF DRAIN W/ OVERFLOW DRAIN, CONNECT TO PRIOR ROOF DRAIN PIPING.
3. RUN NEW LIGHTNING PROTECTION CABLING TO EXISTING AIR TERMINAL AND TIE INTO EXISTING LIGHTNING PROTECTION SYSTEM.

NORTH

E-115 | FLOOR PLAN - LIGHTNING PROTECTION

SCALE: 3/16" = 1'-0"

HG Engineers
621 N Tyndall Pkwy, Suite C
Panama City, FL 32404
E-mail: office@hgengineers.com
Ph: 850.243.6723
FL Authorization No.00006680
Christopher A. Garick; FL. PE No.53924
Thomas A. Alexander; FL. PE No.73172
Daniel J. White; FL. PE No.73790
Caleb W. Leonard; FL. PE No.91782

24110
Job No.

DAG
ARCHITECTS
DAG Architects AR0009694
455 Harrison Ave Suite I Panama City, FL 32401
850.387.1671
www.DAGarchitects.com

BID DOCUMENTS

HCA FLORIDA GULF COAST HOSPITAL
Outpatient Rehabilitation & Diagnostic Center
DIAGNOSTICS MRI
ADDITION
2024 STATE STREET, PANAMA CITY, FL 32405

HCA Florida
Gulf Coast Hospital

REVISIONS:

No.	Description	Date
1	Addendum 1	04/22/2025

FLOOR PLAN -
LIGHTNING PROTECTION

PROJECT NUMBER	24107
DATED	03/28/2025

1 E-115

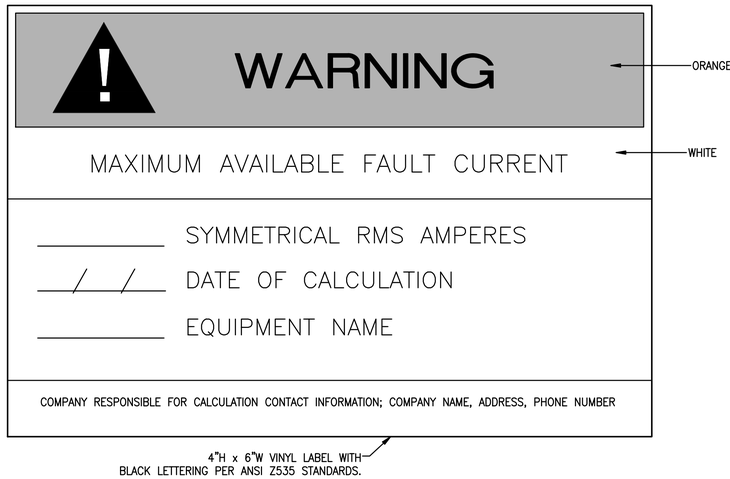

TYPICAL SERVICE EQUIPMENT FAULT CURRENT LABEL DETAIL
NOT TO SCALE

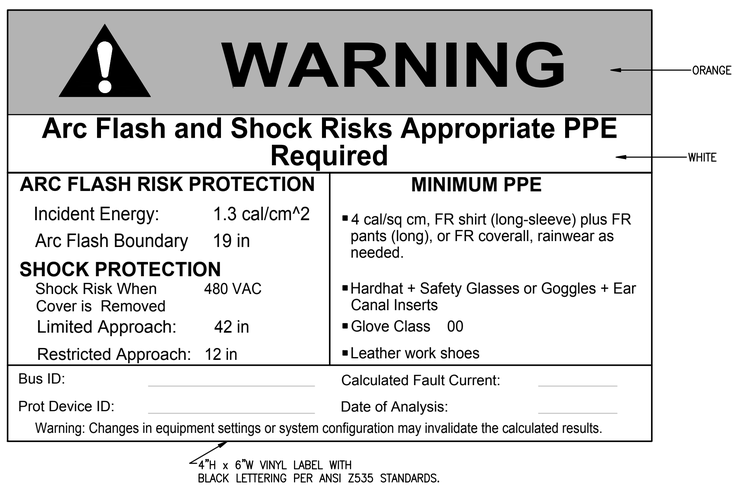

TYPICAL ARC FLASH HAZARD LABEL DETAIL
NOT TO SCALE

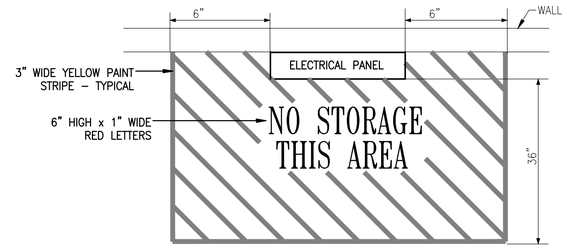

TYPICAL FLOOR MARKING AT ELECTRICAL PANELS
NOT TO SCALE

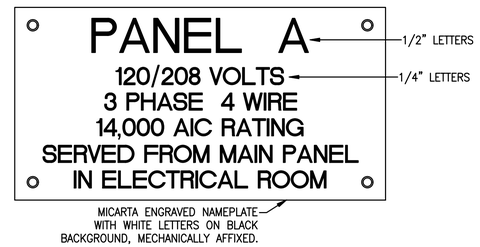

TYPICAL ELECTRICAL EQUIPMENT NAMEPLATE
NOT TO SCALE

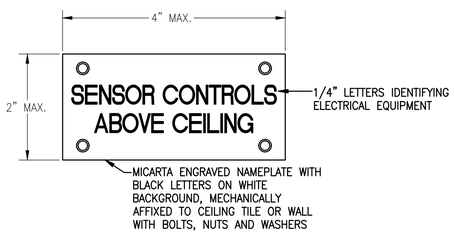

TYPICAL ELECTRICAL EQUIPMENT ABOVE CEILING NAMEPLATE
NOT TO SCALE

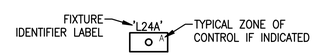

LIGHTING FIXTURE NOMENCLATURE
NOT TO SCALE

EXIT SIGN NOMENCLATURE
NOT TO SCALE

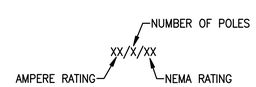

DISCONNECT SWITCH DESCRIPTION NOMENCLATURE

GENERAL NOTE
REFER TO MECHANICAL SCHEDULE FOR DISCONNECT, CONDUIT, AND WIRE SIZE.

*** SPECIAL NOTE ***
PROVIDE 'LSI' TRIP UNITS FOR BREAKERS GREATER THAN OR EQUAL TO 200A.

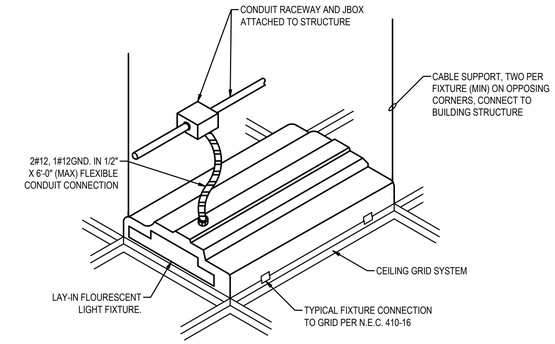

LAY-IN FIXTURE CABLE SUPPORT DETAIL
NOT TO SCALE

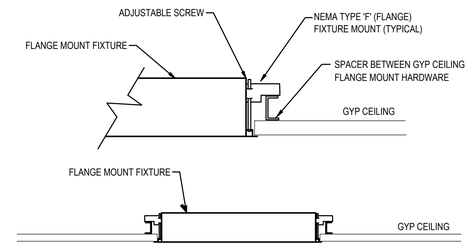

FLANGE MOUNT FIXTURE IN GYP BOARD CEILING
NOT TO SCALE

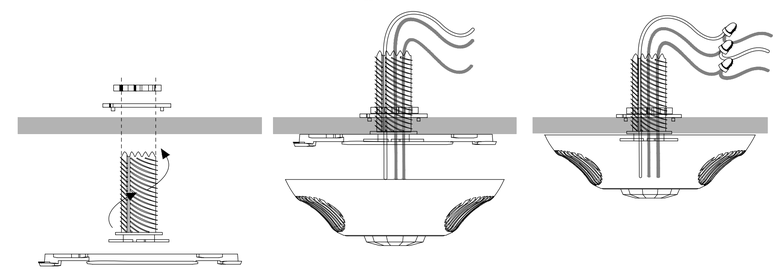

OCCUPANCY SENSOR MOUNTING DETAIL
NTS

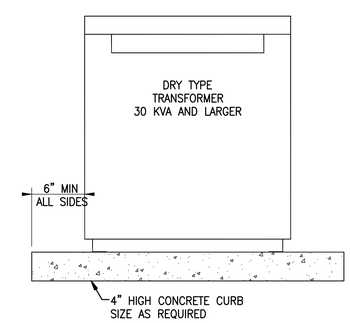

30 KVA AND LARGER - FLOOR MOUNTED

TYPICAL DRY TYPE TRANSFORMER MOUNTING DETAIL
NOT TO SCALE

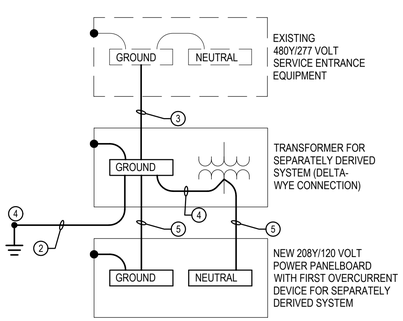

KEYNOTES

1. INSTALL GROUNDED (NEUTRAL) CONDUCTOR SAME SIZE AS THE LARGEST PHASE CONDUCTOR IF THE LINE-TO-NEUTRAL LOAD EXCEEDS 5% OF THE CONNECTED LOAD. IF NEUTRAL LOAD IS SMALLER, INSTALL THE NEC MINIMUM GROUNDED CONDUCTOR.
2. INSTALL GROUNDING ELECTRODE CONDUCTOR, SIZED BASED ON NEC TABLE 250-66 USING THE SERVICE PHASE CONDUCTOR SIZE, BUT NOT SMALLER THAN NO 4.
3. INSTALL EQUIPMENT GROUNDING CONDUCTOR SIZED BASED ON NEC TABLE 250-122 USING THE FEEDER OVERCURRENT DEVICE SIZE.
4. CONNECT TO NEAREST METAL STRUCTURAL GROUNDING ELECTRODE OR COLD WATER PIPE GROUNDING ELECTRODE IN ACCORDANCE WITH ARTICLES 250.30(A) (8) AND 250.104(D)(1) OF THE 2014 N.E.C.
5. INSTALL SUPPLY SIDE BONDING JUMPER THAT IS SIZED BASED ON NEC TABLE 250.66 USING THE SEPARATELY DERIVED SYSTEM PHASE CONDUCTOR SIZE.

GENERAL NOTES

1. CONDUCTOR SIZES SHOWN ARE MINIMUM AND MAY BE LARGER THAN THE MINIMUM SIZES REQUIRED BY NEC.
2. INSTALL GROUNDING CONNECTIONS TO BUILDING STRUCTURE AND WATER PIPES AT LOCATIONS THAT ARE VISIBLE AND ACCESSIBLE FOR INSPECTION, MAINTENANCE, AND TESTING.
3. INSTALL AN INSULATED THROAT GROUNDING BUSHING ON EACH METALLIC FEEDER CONDUIT. BOND TO GROUND BUS USING CONDUCTOR THAT IS SIZED BASED ON NEC TABLE 250-122 USING THE FEEDER CIRCUIT OVERCURRENT DEVICE SIZE OR THE SEPARATELY DERIVED SYSTEM OVERCURRENT DEVICE SIZE.

480Y/277V PARTIAL GROUNDING SYSTEM DIAGRAM
NTS

DAG ARCHITECTS
DAG Architects AR0009694
455 Harrison Ave Suite I Panama City, FL 32401
850.387.1671
www.DAGarchitects.com

BID DOCUMENTS

HCA FLORIDA GULF COAST HOSPITAL
Outpatient Rehabilitation & Diagnostic Center
DIAGNOSTICS MRI ADDITION
2024 STATE STREET, PANAMA CITY, FL 32405

HCA Florida
Gulf Coast Hospital

REVISIONS:

No.	Description	Date
1	Addendum 1	04/22/2025

ELECTRICAL DETAILS

PROJECT NUMBER	24107
DATED	03/28/2025

HG Engineers
621 N Tyndall Pkwy, Suite C
Panama City, FL 32404
E-mail: office@hgengineers.com
Ph: 850.243.6723
Fl. Authorization No.00006680
Christopher A. Garick; FL. PE No.53924
Thomas A. Alexander; FL. PE No.73172
Daniel J. White; FL. PE No.73790
Caleb W. Leonard; FL. PE No.91782

24110 Job No.

E-501

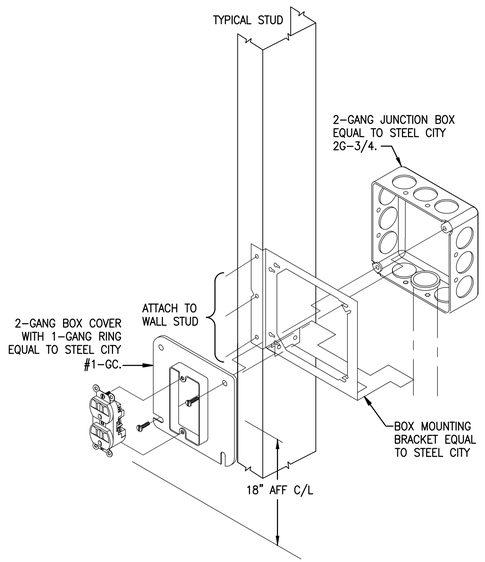

TYPICAL POWER ONLY
NTS

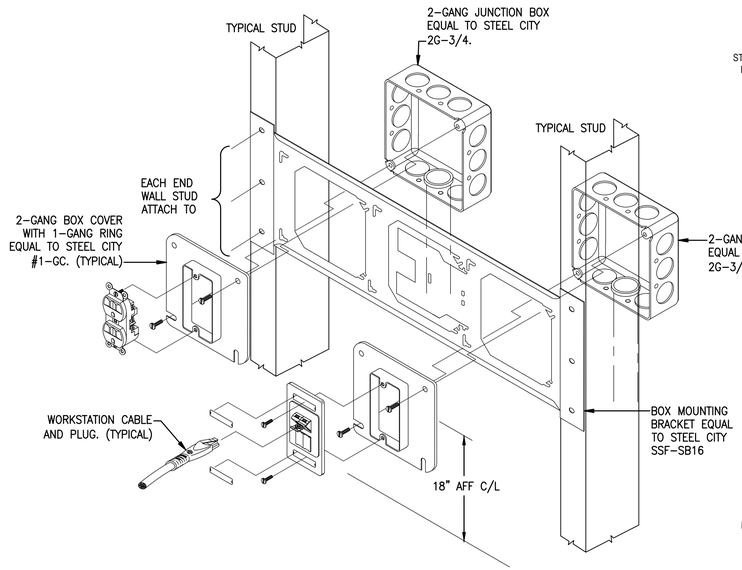

TYPICAL POWER & COMMUNICATIONS
NTS

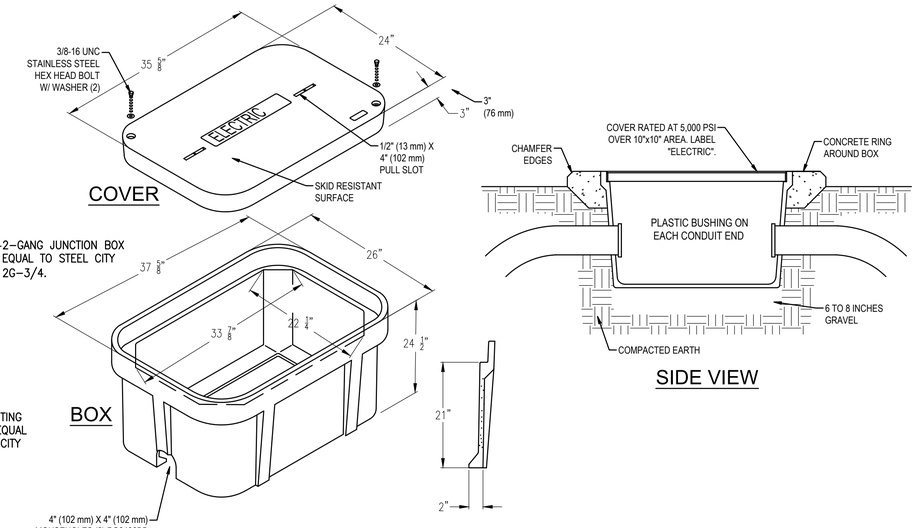

TYPICAL PULLBOX DETAIL
NTS

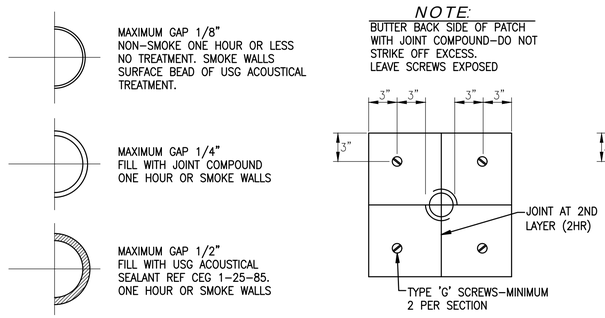

SMALL DIAMETER GAPS IN ONE HOUR WALLS

OPENINGS UP TO 3" DIA.

OPENINGS OVER 3" DIA.

WALL PENETRATIONS –APPLIES TO ALL CORRIDOR, SMOKE AND FIRE RATED WALLS
NTS

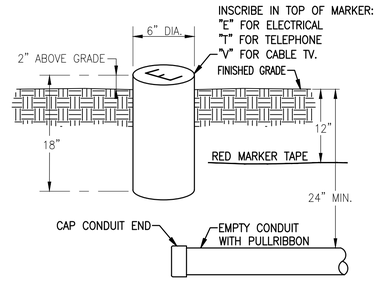

CONDUIT MARKER DETAIL
NTS

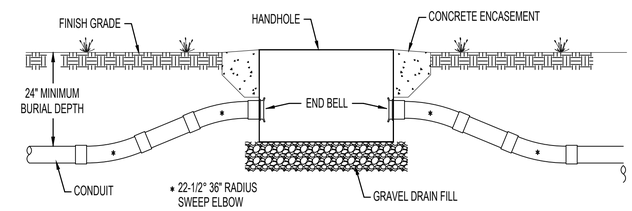

TYPICAL PULLBOX ENTRY DETAIL
NTS

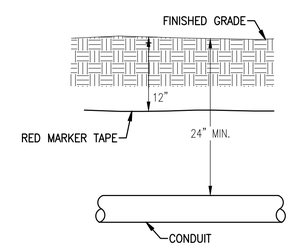

UNDERGROUND CONDUIT DETAIL
NOT TO SCALE

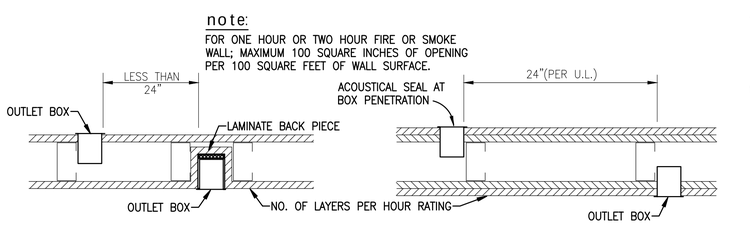

FIVE SIDED ELECTRICAL BOX

ADJACENT ELECTRICAL BOXES

WALL DETAILS - ELECTRICAL BOX INSTALLATION
NTS

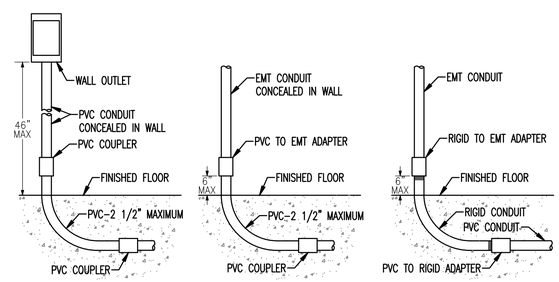

WITH OUTLET BOX

WITHOUT OUTLET BOX

EXPOSED OR FEEDER CONDUIT

PVC STUB-UP DETAILS
NTS

DAG ARCHITECTS
DAG Architects AR0009694
455 Harrison Ave Suite 1 Panama City, FL 32401
850.387.1671
www.DAGarchitects.com

BID DOCUMENTS

HCA FLORIDA GULF COAST HOSPITAL
Outpatient Rehabilitation & Diagnostic Center
DIAGNOSTICS MRI ADDITION
2024 STATE STREET, PANAMA CITY, FL 32405

HCA Florida Gulf Coast Hospital

REVISIONS:

No.	Description	Date
1	Addendum 1	04/22/2025

ELECTRICAL DETAILS

PROJECT NUMBER	24107
DATED	03/28/2025

HG ENGINEERS
HG Engineers
621 N Tyndall Pkwy, Suite C
Panama City, FL 32404
E-mail: office@hgengineers.com
Ph: 850.243.6723
FL Authorization No.00006680
Christopher A. Garick; FL PE No.53924
Thomas A. Alexander; FL PE No.73172
Daniel J. White; FL PE No.73790
Caleb W. Leonard; FL PE No.91782
24110 Job No.

△ E-502

22017
CONSTRUCTION DWGS
2025-04-25

GROUNDING REQUIREMENTS

- All power lines into the RF shielded room require an RF filter.
- All electrical devices (for example, outlets, light fixtures, and so on) must have a ground wire from device power source and be grounded to the RF Shield at the RF Common Ground Stud.
- Resistance between any two grounded devices must not exceed 0.1 ohm to ensure equal potential ground system within the Magnet Room.
- Do not ground non-MR equipment to the MR ground system.
- The common ground stud must be installed near the penetration point(s) of the GE equipment, into the RF shield between the Equipment Room and Magnet Room.
- For additional information refer to RF Shielded Room manual 5850260-1EN

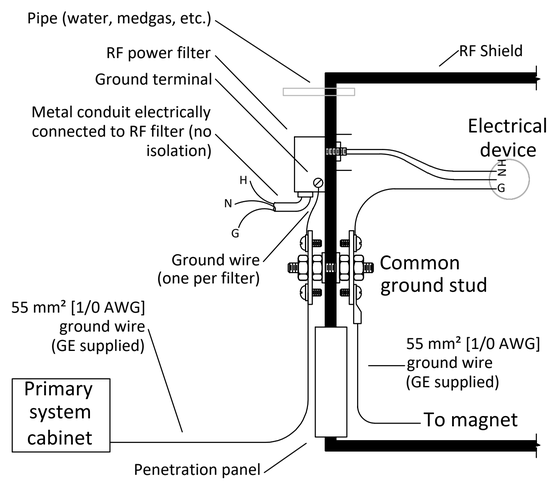

TYPICAL MAGNET ROOM GROUNDING DETAIL

NTS

CABLE TRAY DETAIL

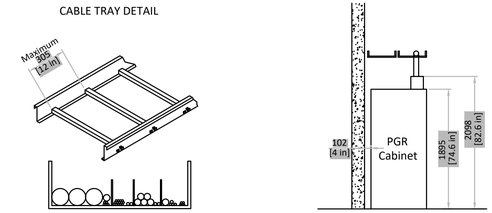

Minimum Cable Tray Width					
	PGR		ICC		OW
	Electrical	Air/Water	Electrical	Air/Water	Electrical
Pen Panel	300 [12 in]	N/A	N/A	450 [18 in]	76 [3 in]
PGR	N/A	N/A	76 [3 in]	150 [6 in]	76 [3 in]
ICC	76 [3 in]	150 [6 in]	N/A	N/A	N/A
OW	76 [3 in]	N/A	N/A	N/A	N/A

- EC to supply all cable tray, including all accessories for a complete and functional cable tray system. Coordinate installation with RF shielding installer.

CABLE TRAYS IN EQUIPMENT ROOM DETAIL

NTS

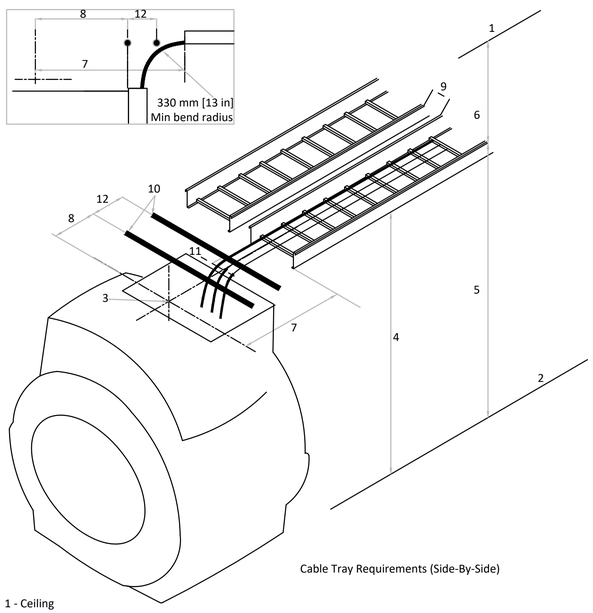

Cable Tray Requirements (Side-By-Side)

1 - Ceiling
2 - Finished Floor
3 - Magnet isocenter. Gradient cables must be centered on magnet isocenter.
4 - Minimum cable tray height required at back of Magnet: 2578 mm [101.5 in].
Tray height may be lower at other points to avoid obstructions.
5 - Maximum height from floor to top of tray (anywhere in Magnet room): 3251 mm [128 in].
6 - Minimum distance from top of cable tray to ceiling or other obstruction: 254 mm [10 in].
7 - Tray end to isocenter: 1336 ±12 mm [52.60 ±0.5 in].
8 - Other cable termination to isocenter: 955 ±12 mm [37.60 ±0.5 in] (IPM series).
9 - Minimum distance between trays: 12 mm [0.5 in].
10 - Non-ferrous cable support
11 - The center of the gradient cable group is 89 mm [3.5 in] from magnet center.
12 - Distance between non-ferrous cable support: ≤ 305 mm [12 in].

- EC to supply all cable tray, including all accessories for a complete and functional cable tray system. Coordinate installation with RF shielding installer.

CABLE TRAYS IN MAGNET ROOM DETAIL

NTS

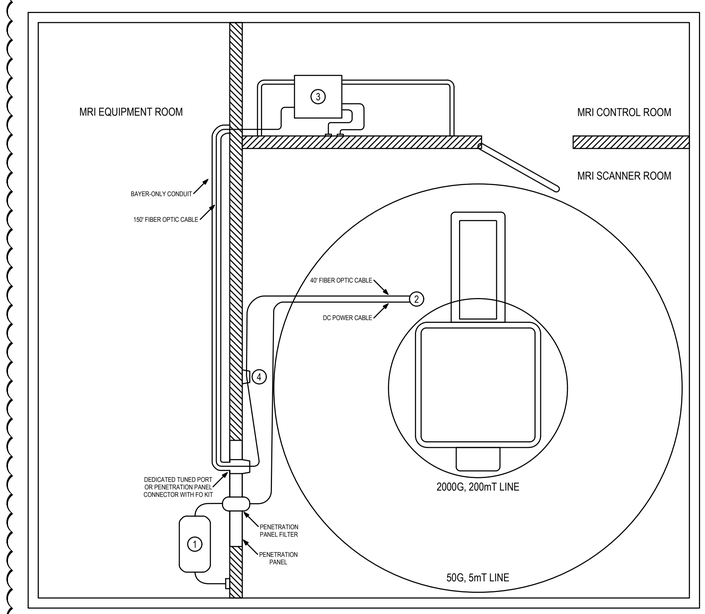

#	NAME	INSTALLATION
1.	SCAN ROOM POWER SUPPLY	INSTALLED OUTSIDE THE SCAN ROOM IN THE EQUIPMENT ROOM, OUTSIDE OF THE HIGH TRAFFIC AREA, NEAR AN AC OUTLET.
2.	MRXP SCAN ROOM UNIT	CAN BE POSITIONED UP TO THE 2000G, 200MT LINE, AS MEASURED AT THE HEIGHT OF THE MOTORS. THERE MAY BE OTHER RESTRICTIONS DEPENDING ON SCANNER TYPE, REFER TO OPERATION MANUAL.
3.	WORKSTATION	INSTALLED IN THE CONTROL ROOM.
4.	FO QUICK DISCONNECT PANEL	INSTALLED ON A SCAN ROOM WALL IN A CONVENIENT LOCATION WITH EASY ACCESS TO DISCONNECT THE FO CABLE.

BAYER INSTALLATION CONFIGURATION DIAGRAM

NTS

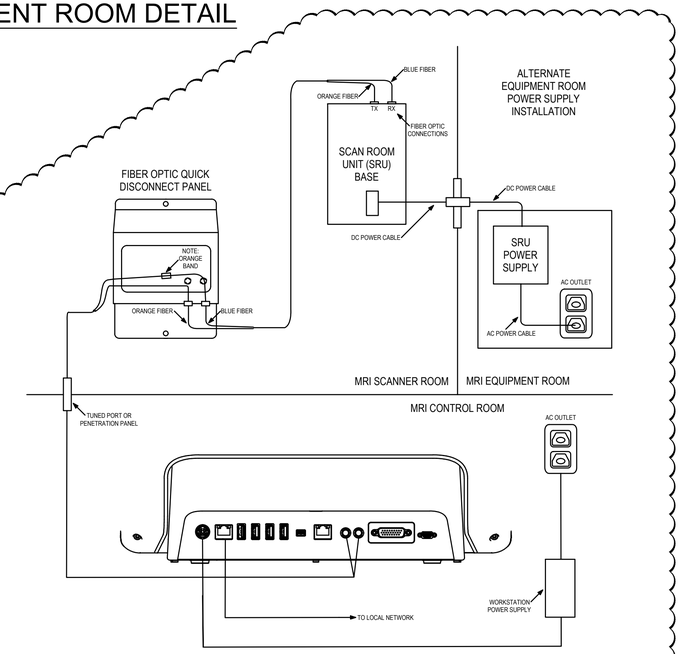

BAYER WORKSTATION INTERCONNECT DIAGRAM

NTS

DAG ARCHITECTS
DAG Architects AR0009694
455 Harrison Ave Suite I Panama City, FL 32401
850.387.1671
www.DAGarchitects.com

BID DOCUMENTS

HCA FLORIDA GULF COAST HOSPITAL
Outpatient Rehabilitation & Diagnostic Center
DIAGNOSTICS MRI ADDITION
2024 STATE STREET, PANAMA CITY, FL 32405

HCA Florida
Gulf Coast Hospital

REVISIONS:

No.	Description	Date
1	Addendum 1	04/22/2025

ELECTRICAL DETAILS

HG ENGINEERS
HG Engineers
621 N Tyndall Pkwy, Suite C
Panama City, FL 32404
E-mail: office@hgengineers.com
Ph: 850.243.6723
Fl. Authorization No.00006680
Christopher A. Garick; FL. PE No.53924
Thomas A. Alexander; FL. PE No.73172
Daniel J. White; FL. PE No.73790
Caleb W. Leonard; FL. PE No.91782

24110 Job No.

PROJECT NUMBER	24107
DATED	03/28/2025

1 E-503

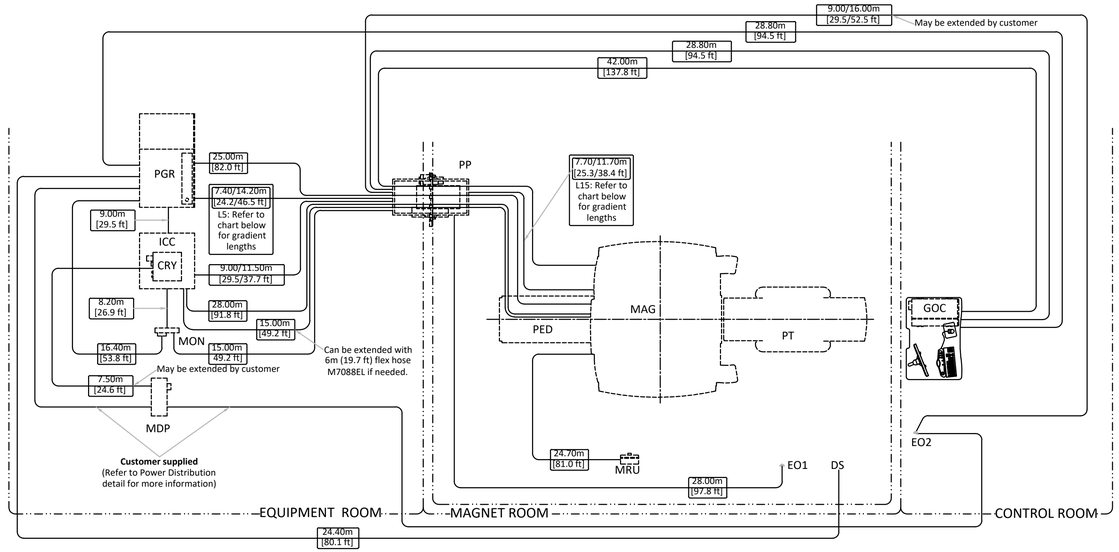

GRADIENT CABLE LENGTH OPTIONS

Length Identifier	Available lengths m (ft)	Proposed
L5 (Equipment Room)	3.7 (12.9)	-
	5.7 (18.7)	-
	7.7 (25.3)	-
	9.7 (31.8)	-
	11.7 (38.4)	-
	13.7 (45.0)	-
	15.7 (51.5)	-
L15 (Magnet Room)	4.6 (15.1)	-
	6.6 (21.6)	-
	8.6 (28.2)	-
	10.6 (34.7)	-
	12.6 (41.3)	-

CABLE ROUTING FOR ACCESSORIES

OPTION	FROM	TO	CABLE LENGTH m (ft)
Magnetic Resonance Elastography (MRE)	MRE	Magnet (Isocenter)	Nominal: 7.31 (24) Maximum: 10.06 (33)
	MRE	PP	15.24 (50)
	MRE	Ethernet Hub in PGR	15.24 (50)
	MRE	Customer Supplied Outlet	60Hz: 6.10 (20) 50Hz: 7.62 (25)
Multi-Nuclear Spectroscopy (MNS)	MNS	PGR	9.85 (32.3)
	MNS	PGR	7.85 (25.7)/14 (45.9)
	PP	PGR	8.2 (26.9)/14.35 (47)
Brainwave (BW)	BW	PP	18.3 (60)

GENERAL NOTE: PMI must validate proposed selectables and send confirmation to OTR. Refer to MyProjects if Proposed field is blank.
GOLDSEAL/SILVER PREFERRED NOTE: Cable lengths listed may differ from what is shipped with the system. Contact the Goldseal group for actual lengths to be delivered.
ROOM MOVE NOTE: Cable lengths listed may differ from what is included with reinstalled system. Contact the local field engineer for actual lengths to be delivered.

Order Configuration Options

Configuration	Equipment Room - site option	Magnet Room - site option	Proposed
A	Short	Short	-
B	Long	Short	-
C	Short	Long	-

FACILITY SUPPLIED WIRING DETAIL
NTS

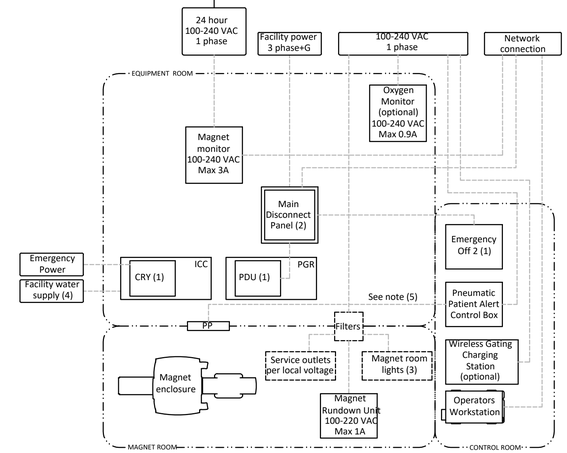

This diagram displays minimum power requirements for GE equipment and should be used as a guide to determine appropriate wire sizes per local regulatory requirements.

CRY	Cryocooler Compressor (Inside ICC)
ICC	Integrated Cooling Cabinet
PDU	Power Distribution Unit (inside PGR)
PGR	Power, Gradient, RF Cabinet
PP	Penetration Panel

Notes :
(1) Refer to Power Distribution detail for more information
(2) Size incoming wires from GE equipment according to conductor sizes listed on Power Distribution detail.
A network connection must be provided near the MDP to support power quality monitoring.
(3) Refer to Lighting Requirements detail
(4) This group contains water lines which shall be routed separate from electrical lines (I.E. power and signal)
(5) A cable is supplied by GE but may be extended if needed.

Cable SUPPLIED BY CUSTOMER
Equipment SUPPLIED BY GE
Equipment SUPPLIED BY CUSTOMER

FACILITY INTERCONNECTIONS DETAIL
NTS

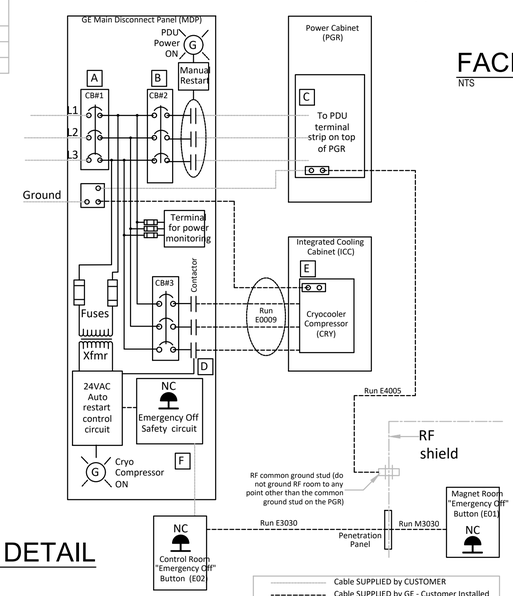

Cable SUPPLIED by CUSTOMER
Cable SUPPLIED by GE - Customer Installed
Equipment SUPPLIED by CUSTOMER
Equipment SUPPLIED by GE

Accepts following range of standard stranded conductors. All wire types, color and sizing to be selected in accordance with governing electrical code(s).

GE MDP M7100ZA 380V-480V				
Item	Phase		Ground	
	sq mm	AWG/kcmil	sq mm	AWG/kcmil
A	6-120	10-250	16-120	6-250
B	10-120	8-250	35-120	2-250
C	2.5-70	14-2/0	2.5-70	14-2/0
D	2.5-4	14-10	2.5-16	14-10
E	2.5-6	14-10	2.5-6	14-10
F	0.5-10	22-10	-	-

CB	MDP
1	200 A
2	150 A
3	25 A

NOTES:
1) Cryocooler Compressor (CRY) must operate 24 hours per day, 7 days per week.
2) Runs E0009, E3030 and M3030 are GE supplied cables. All other wiring is customer supplied and installed.
3) Two remote Emergency Off Maintained Buttons are supplied with the MDP. Emergency Off removes power from all outputs when activated.
4) All MDP output circuits drop out on loss of power. the Cryocooler (CRY) circuit will automatically restart upon restoration of power.
5) MDP Short circuit current rating is 25,000 amperes at 480 VAC.
6) MDP is NRTL labeled.
7) All feeder circuits require dedicated ground wires.

MRI POWER DISTRIBUTION DETAIL
NTS

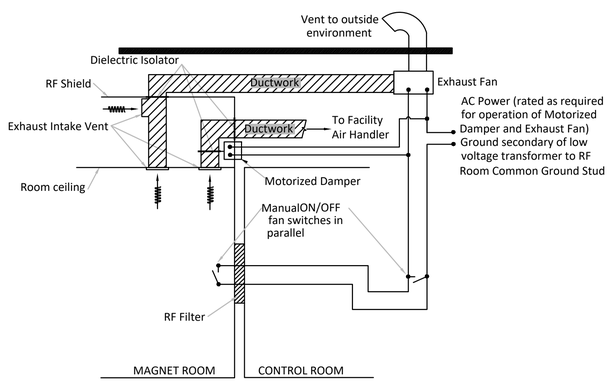

MAGNET ROOM EXHAUST FAN SCHEMATIC
NTS

DAG ARCHITECTS
DAG Architects AR0009694
455 Harrison Ave Suite I Panama City, FL 32401
850.387.1671
www.DAGarchitects.com

BID DOCUMENTS

HCA FLORIDA GULF COAST HOSPITAL
Outpatient Rehabilitation & Diagnostic Center
DIAGNOSTICS MRI ADDITION
2024 STATE STREET, PANAMA CITY, FL 32405

HCA Florida
Gulf Coast Hospital

REVISIONS:

No.	Description	Date
1	Addendum 1	04/22/2025

ELECTRICAL DETAILS

HG Engineers
621 N Tyndall Pkwy, Suite C
Panama City, FL 32404
E-mail: office@hgengineers.com
Ph: 850.243.6723
FL Authorization No.00006680
Christopher A. Garick; FL. PE No.53924
Thomas A. Alexander; FL. PE No.73172
Daniel J. White; FL. PE No.73790
Caleb W. Leonard; FL. PE No.91782

24110
Job No.

PROJECT NUMBER	24107
DATED	03/28/2025

△ E-504

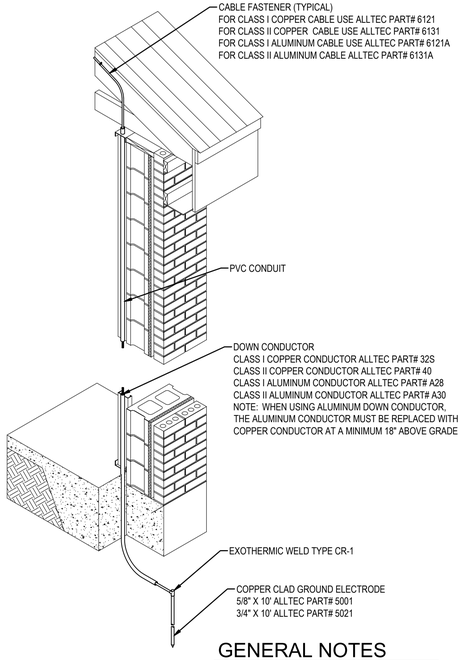

GENERAL NOTES

1. GROUND ELECTRODE SHALL BE DRIVEN AT A MINIMUM 2'-0" FROM FOUNDATION & 1'-6" BELOW GRADE.

CONCEALED COPPER DOWN CONDUCTOR TO GROUND

NTS

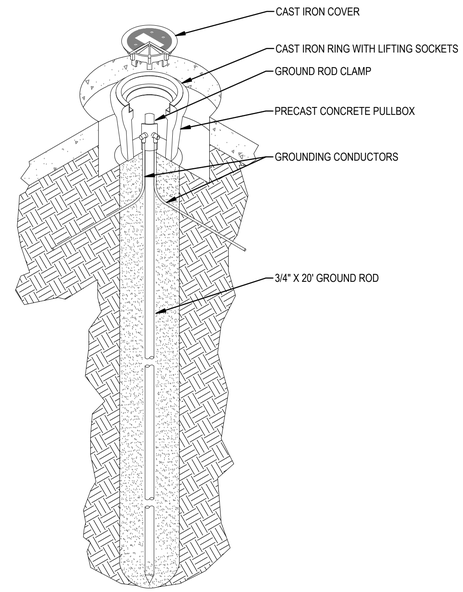

GROUNDING WELL

NTS

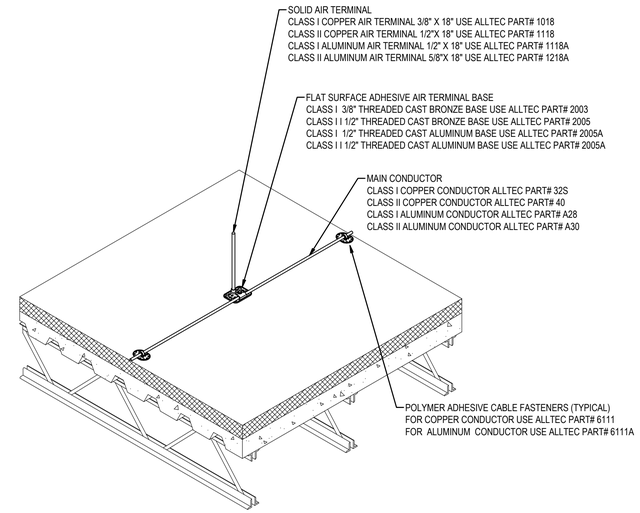

MID ROOF MOUNTED AIR TERMINAL

NTS

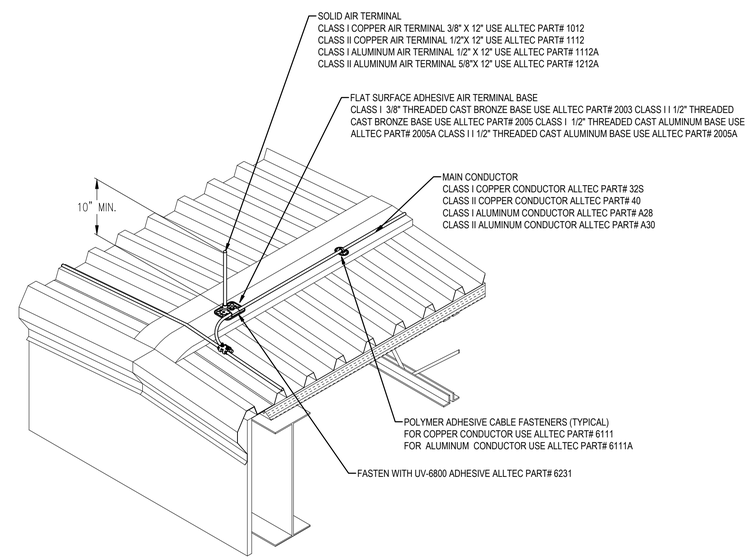

AIR TERMINAL MOUNTED AT SLOPED ROOF RIDGE

NTS

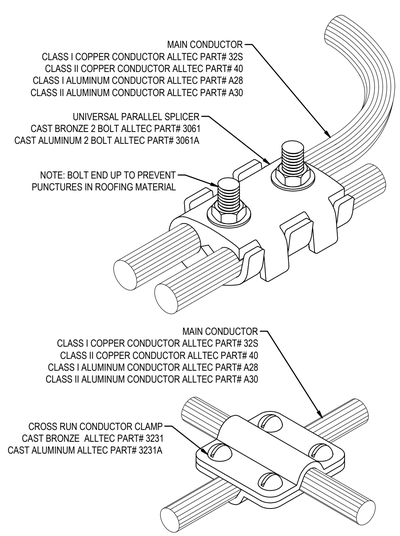

CABLE CLAMPS & SPLICERS

NTS

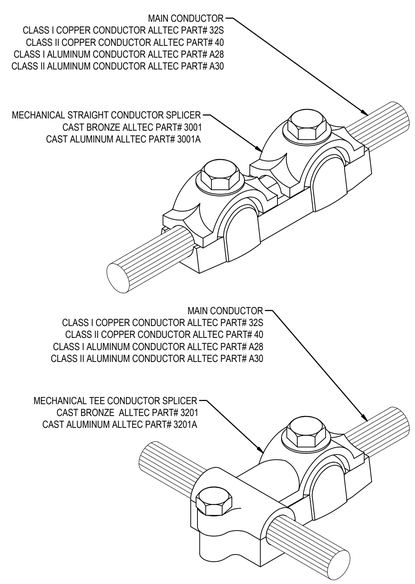

CABLE CLAMPS & SPLICERS

NTS

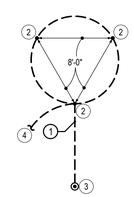

KEYNOTES

1. LIGHTNING PROTECTION SYSTEM DOWNLEAD CONDUCTOR; SIZE TO BE DETERMINED BY SYSTEM SUPPLIER AND INSTALLER.
2. 3/4"DIAx10' SECTIONAL DRIVEN GROUND ROD.
3. TYPICAL LIGHTNING PROTECTION AIR TERMINAL, REFER TO SPECS AND DETAIL THIS SHEET.
4. GROUND CONDUCTOR TO MAIN BUILDING GROUND.

GROUNDING ELECTRODE SYSTEM

NTS

NORTH

E-505 | LIGHTNING PROTECTION DETAILS

SCALE: 1/8" = 1'-0"

HG Engineers
621 N Tyndall Pkwy, Suite C
Panama City, FL 32404
E-mail: office@hgengineers.com
Ph: 850.243.6723
FL Authorization No.00006680
Christopher A. Garick; FL PE No.53924
Thomas A. Alexander; FL PE No.73172
Daniel J. White; FL PE No.73790
Caleb W. Leonard; FL PE No.91782

24110
Job No.

DAG
ARCHITECTS
DAG Architects AR0009694
455 Harrison Ave Suite I Panama City, FL 32401
850.387.1671
www.DAGarchitects.com

BID DOCUMENTS

HCA FLORIDA GULF COAST HOSPITAL
Outpatient Rehabilitation & Diagnostic Center
DIAGNOSTICS MRI
ADDITION
2024 STATE STREET, PANAMA CITY, FL 32405

HCA Florida
Gulf Coast Hospital

REVISIONS:

No.	Description	Date
1	Addendum 1	04/22/2025

LIGHTNING PROTECTION DETAILS

PROJECT NUMBER	24107
DATED	03/28/2025

1 E-505

22017
CONSTRUCTION DWGS
2025-04-25

LIGHTING FIXTURE SCHEDULE

Project: #24110 - HCA FL GULF COAST DIAGNOSTIC CENTER MRI

Note: Per electrical specifications, required alternate fixtures shall be submitted to the engineer for prior approval a minimum of (10) ten business days prior to bid date. Any required alternate fixtures not submitted for prior approval will not be reviewed.

Luminaire Designation	Manufacturer	Catalog Number	Connected Voltage	Luminaire Load (va)	Lamping Source	Color Rendering Index (CRI)	Kelvin Temperature	Mounting	Comments	Prior Approved Equal Required
L22	H.E. WILLIAMS	BP-22-LS/8CS-QS-DIM-UNV	120V		LED	80	4100K	CEILING - RECESSED	UTILIZE 3500 LUMEN SELECTION	YES
L24	H.E. WILLIAMS	BP-24-LS/8CS-QS-DIM-UNV	120V	28	LED	80	4000K	CEILING - RECESSED	UTILIZE 3500 LUMEN SELECTION	YES
L24E	H.E. WILLIAMS	BP-24-LS/8CS-EM/8W-QS-DIM-UNV	120V	28	LED	80	4000K	CEILING - RECESSED	UTILIZE 3500 LUMEN SELECTION	YES
L24S	H.E. WILLIAMS	BP-24-LS/8CS-QS-DIM-UNV BP24/W/D/96	120V	28	LED	80	4000K	CEILING - SUSPENDED MOUNT 8'-0" AFF	UTILIZE 3500 LUMEN SELECTION	YES
L24SE	H.E. WILLIAMS	BP-24-LS/8CS-EM/8W-QS-DIM-UNV BP24/W/D/96	120V	28	LED	80	4000K	CEILING - SUSPENDED MOUNT 8'-0" AFF	UTILIZE 3500 LUMEN SELECTION	YES
M22	KIRLIN LIGHTING	MRP-22290-2500L-41K-2X2	120V	35	LED	90	4100K	CEILING - RECESSED	LED DRIVERS PROHIBITED FROM MAGNET ROOM; PLACE IN CABINET IN MRI EQUIPMENT ROOM AND UTILIZE FILTER THROUGH RF SHIELD	YES
M22E	KIRLIN LIGHTING	MRP-22290-2500L-41K-2X2	120V	35	LED	90	4100K	CEILING - RECESSED	LED DRIVERS PROHIBITED FROM MAGNET ROOM; PLACE IN CABINET IN MRI EQUIPMENT ROOM AND UTILIZE FILTER THROUGH RF SHIELD; SUPPLY EMERGENCY POWER FROM EQUIPMENT ROOM INVERTER	YES
VT	H.E. WILLIAMS	96-4-L40/840-SFRA-GC2/L/10-DIM-UNV	120V	30	LED	80	4000K	CEILING - SUSPENDED MOUNT 9'-0" AFF		YES
VTE	H.E. WILLIAMS	96-4-L40/840-EM/10W-SFRA-GC2/L/10-DIM-UNV	120V	30	LED	80	4000K	CEILING - SUSPENDED MOUNT 9'-0" AFF		YES
WP	H.E. WILLIAMS	WPCS-L30/840-BZ-DIM-UNV	120V	28	LED	80	4000K	WALL - SURFACE	MOUNT ABOVE DOORWAY AND MATCH HEIGHT OF EXISTING WALLPACK FIXTURES.	YES
WPE	H.E. WILLIAMS	WPCS-L30/840-BZ-EM/6W-DIM-UNV	120V	28	LED	80	4000K	WALL - SURFACE	MOUNT ABOVE DOORWAY AND MATCH HEIGHT OF EXISTING WALLPACK FIXTURES.	YES
X	H.E. WILLIAMS	EXIT-R-EM-WHT-SDT-D	120V	2.5	LED	- - -	- - -	CEILING - SURFACE		YES
LTG CAB	KIRLIN LIGHTING	MRI-CABNT	- - -	- - -	- - -	- - -	- - -	WALL - SURFACE ABOVE INV	LOCATED IN MRI EQUIPMENT ROOM, EC TO SUPPLY AND INSTALL	YES
	KIRLIN LIGHTING	RFI-4100D	- - -	- - -	- - -	- - -	- - -	WALL - SURFACE	PROVIDE TWO (2) FOUR-CHANNEL FILTERS TO ACCOUNT FOR ALL SIX (6) FIXTURES; LEAVE TWO (2) TERMINAL SETS AS FUTURE SPARES.	YES
	KIRLIN LIGHTING	DVR-1400A	- - -	- - -	- - -	- - -	- - -	CABINET MOUNT	PROVIDE SIX (6) LED DRIVERS AND INSTALL IN MRI LIGHTING CABINET; LEAVE TWO (2) SPACES FOR FUTURE USE.	YES
INV	KIRLIN LIGHTING	EMI-03120	- - -	- - -	- - -	- - -	- - -	WALL - SURFACE BENEATH LTG CAB	EMERGENCY BACKUP SYSTEM; INSTALL TO OPERATE SPECIFIED DRIVERS IN MRI LIGHTING CABINET UPON POWER FAILURE.	YES

Lighting Space and Zones				Sequence of Operations								Low Voltage Switch Matrix (Button Labels to be designated by owner during installation)						
		ZONE OF CONTROL		CONTROL SCENARIOS								CONNECT TO NETWORKED ROOM CONTROLLER OR LIGHTING CONTROL PANEL						
Space Type	Room Number	Description	Designator	Manual On	Manual Off	Dimming	Multi-Level Control	Timeclock On	Timeclock Off	Occupancy Sensor On	Vacancy Sensor Off	S1.1 (1-Button)	S1.2 (2-Button)	S1.3 (3-Button)	S1.4 (4-Button)	Sw. (Integral Sensor, Line Voltage)	S.(Toggle Switch, Line Voltage)	Remarks
Corridor	A100			X						X	X		X					
Control Room	A101			X	X	X				X	X		X	X				
Magnet Room	A102			X	X	X								X				
Equipment Room	A103			X	X												X	
Changing Room	A104			X	X					X	X					X		
Mechanical Room	A105			X	X												X	
Zone 1 Entry	N/A			X						X	X		X					
Building Exterior Lighting	N/A																	Utilize Existing Building Controls

SWITCH FUNCTION / CONTROL MATRIX

Room Name	Room Num.	Low Voltage Switch Button Qty. (Switch Model #)	Switch Button Number and Correlated Function (Button labels are recommendations and shall be designated by owner during						Additional Notes
			Button #1		Button #2		Button #3		
			Function	Label	Function	Label	Function	Label	
Control Room	A101	LMSW-220	On	ON	Off	OFF			
		LMSW-211	On/Off	ON/OFF	Dim Up	Up Arrow	Dim Down	Down Arrow	
Magnet Room	A102	LMSW-211	On/Off	ON/OFF	Dim Up	Up Arrow	Dim Down	Down Arrow	Switch Located in Control Room.
Zone 1 Entry	N/A	LMSW-220	On	ON	Off	OFF			

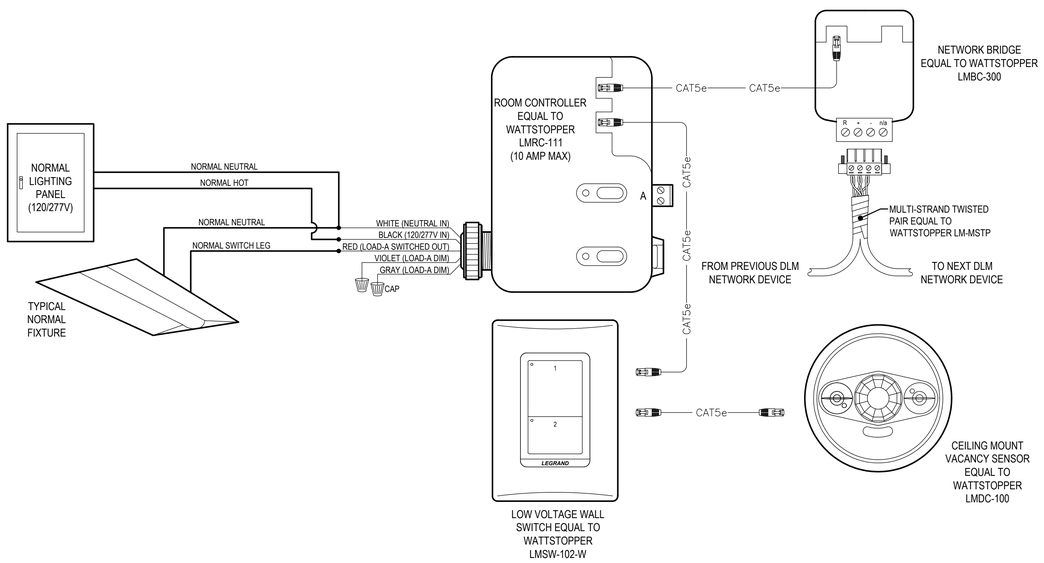

TYPICAL NON-DIMMING LIGHTING CONTROL DETAILS

NTS

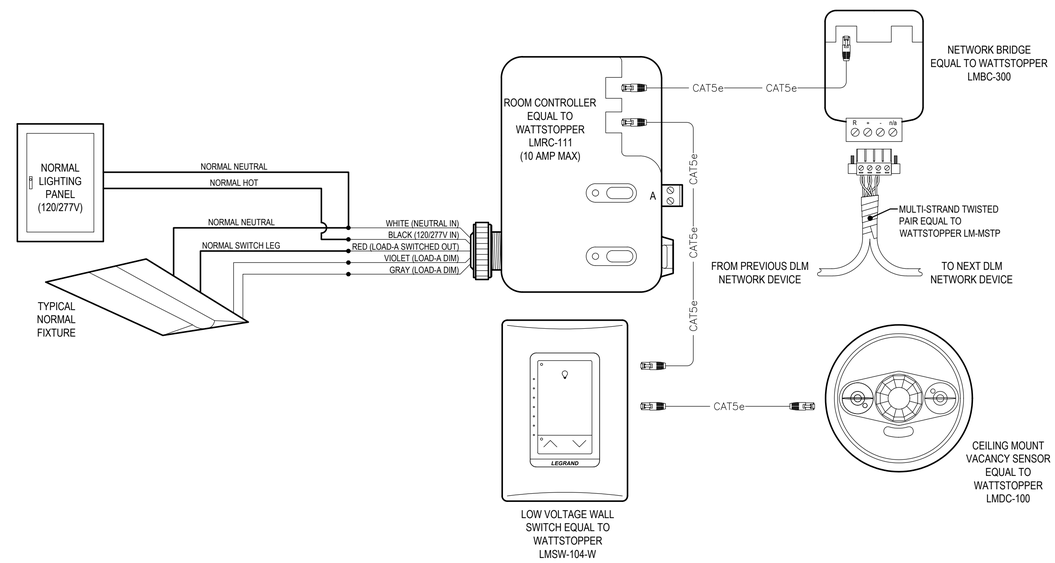

TYPICAL DIMMING LIGHTING CONTROL DETAILS

NTS

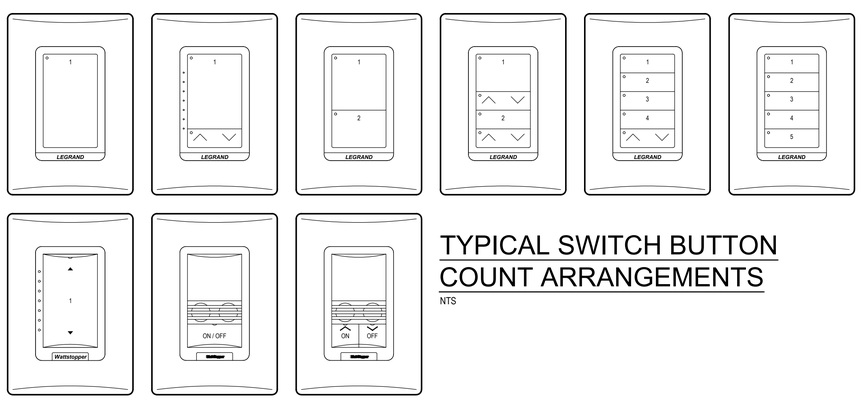

TYPICAL SWITCH BUTTON COUNT ARRANGEMENTS

NTS

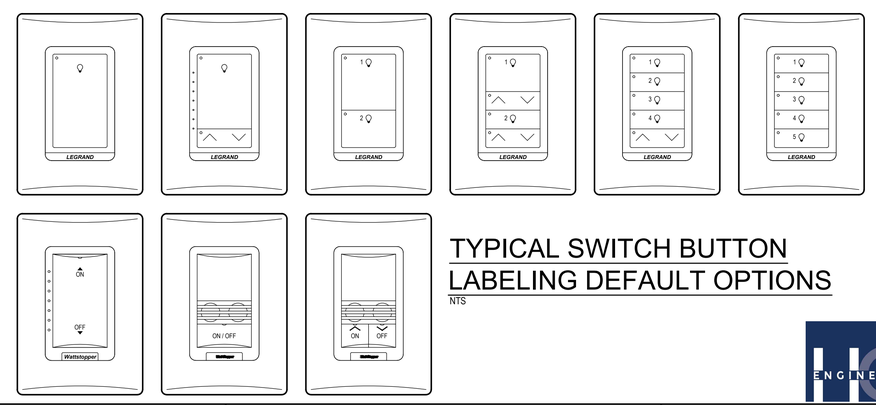

TYPICAL SWITCH BUTTON LABELING DEFAULT OPTIONS

NTS

HG Engineers
621 N Tyndall Pkwy, Suite C
Panama City, FL 32404
E-mail: office@hgengineers.com
Ph: 850.243.6723
FL Authorization No.00006680
Christopher A. Garick; FL. PE No.53924
Thomas A. Alexander; FL. PE No.73172
Daniel J. White; FL. PE No.73790
Caleb W. Leonard; FL. PE No.91782

24110
Job No.

DAG ARCHITECTS
DAG Architects AR0009694
455 Harrison Ave Suite I Panama City, FL 32401
850.387.1671
www.DAGarchitects.com

BID DOCUMENTS

HCA FLORIDA GULF COAST HOSPITAL
Outpatient Rehabilitation & Diagnostic Center
DIAGNOSTICS MRI ADDITION
2024 STATE STREET, PANAMA CITY, FL 32405

HCA Florida
Gulf Coast Hospital

REVISIONS:

No.	Description	Date
1	Addendum 1	04/22/2025

LIGHTING CONTROLS & FIXTURE SCHEDULE

PROJECT NUMBER	24107
DATED	03/28/2025

E-506

22017
CONSTRUCTION DWGS
2025-04-25

FIRE ALARM RISER GENERAL NOTES

1. THIS DIAGRAM IS NOT INTENDED TO SHOW EXACT QUANTITIES OF DEVICES. REFER TO PLAN FOR DEVICE QUANTITIES AND LOCATIONS.
2. THE RISER REPRESENTS A TYPICAL SYSTEM AND IS NOT INTENDED FOR INSTALLATION, SYSTEM SUPPLIER SHALL PROVIDE INSTALLATION DRAWINGS AND WIRING DIAGRAMS.
3. PROVIDE ADDITIONAL MONITOR AND CONTROL MODULES AS RECOMMENDED BY THE SYSTEM SUPPLIER.
4. FIRE ALARM SYSTEM SHALL HAVE U.L. APPROVED DIGITAL ALARM DIALER/COMMUNICATOR TO SEND ALARM SIGNAL TO MONITORING SERVICE.
5. FIRE ALARM SYSTEM LOW VOLTAGE SOURCE AND BATTERY STAND-BY SHALL ENERGIZE ALL ITEMS IN FIRE ALARM SYSTEM THAT REQUIRE POWER.
6. REFER TO MECHANICAL DRAWINGS FOR SMOKE AND/OR SMOKE/FIRE DAMPER LOCATIONS. CONNECT TO FIRE ALARM SYSTEM AND TO 120V POWER.
7. VERIFY LOCATION AND QUANTITIES OF FLOW AND TAMPER SWITCHES WITH SPRINKLER CONTRACTOR.

KEYNOTES

1. EXISTING FIRE-LITE MS-5UD-3 FIRE ALARM CONTROL PANEL. ENSURE ALL NEW DEVICES ARE COMPATIBLE WITH EXISTING SYSTEM.

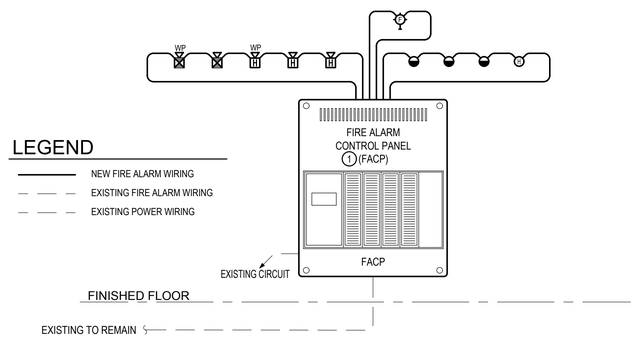

PARTIAL FIRE ALARM SYSTEM RISER

NTS

SPECIAL NOTE

INSTALL A CONCRETE-ENCASED MAIN GROUNDING ELECTRODE IN THE BUILDING FOUNDATION AROUND THE ENTIRE PERIMETER OF THE BUILDING. LOCATE ELECTRODE IN THE BOTTOM ONE-THIRD OF THE FOUNDATION WITH AT LEAST 3 INCHES OF CONCRETE COVER. USE EITHER OF THE FOLLOWING MATERIALS FOR THE ELECTRODE:

- BARE COPPER CABLE NOT SMALLER THAN THE GROUNDING ELECTRODE CONDUCTOR REQUIRED BY THE NEC AND NOT SMALLER THAN NO 4.
- BARE OR GALVANIZED REBARS THAT ARE MADE ELECTRICALLY CONTINUOUS USING COPPER JUMPERS NOT SMALLER THAN THE NEC REQUIRED GROUNDING ELECTRODE CONDUCTOR AND NOT SMALLER THAN NO 4 REBAR.

GROUNDING ELECTRODE SHALL BE INSPECTED AND VERIFIED BY THE ENGINEER PRIOR TO FILLING CONCRETE COVER.

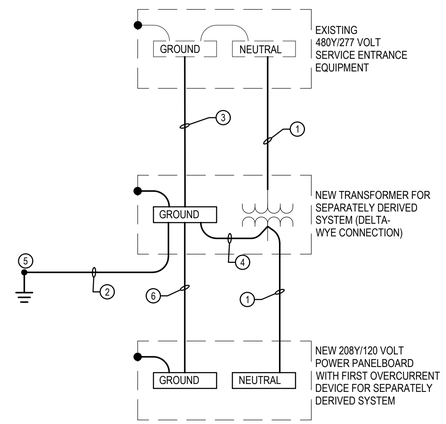

GENERAL NOTES

1. BOND HOT AND COLD WATER PIPING SYSTEMS.
2. CONDUCTOR SIZES SHOWN ARE MINIMUM AND MAY BE LARGER THAN THE MINIMUM SIZES REQUIRED BY NEC.
3. INSTALL GROUNDING CONNECTIONS TO BUILDING STRUCTURE AND WATER PIPES AT LOCATIONS THAT ARE VISIBLE AND ACCESSIBLE FOR INSPECTION, MAINTENANCE, AND TESTING.
4. INSTALL AN INSULATED THROAT GROUNDING BUSHING ON EACH METALLIC SERVICE ENTRANCE CONDUIT. BOND TO GROUND BUS USING CONDUCTOR THAT IS SIZED BASED ON NEC TABLE 250-66 USING THE SERVICE PHASE CONDUCTOR SIZE.
5. INSTALL AN INSULATED THROAT GROUNDING BUSHING ON EACH METALLIC FEEDER CONDUIT. BOND TO GROUND BUS USING CONDUCTOR THAT IS SIZED BASED ON NEC TABLE 250-122 USING THE FEEDER CIRCUIT OVERCURRENT DEVICE SIZE OR THE SEPARATELY DERIVED SYSTEM OVERCURRENT DEVICE SIZE.

KEYNOTES

1. INSTALL GROUNDED (NEUTRAL) CONDUCTOR SAME SIZE AS THE LARGEST PHASE CONDUCTOR IF THE LINE-TO-NEUTRAL LOAD EXCEEDS 5% OF THE CONNECTED LOAD. IF NEUTRAL LOAD IS SMALLER, INSTALL THE NEC MINIMUM GROUNDED CONDUCTOR.
2. INSTALL GROUNDING ELECTRODE CONDUCTOR, SIZED BASED ON NEC TABLE 250-66 USING THE SERVICE PHASE CONDUCTOR SIZE, BUT NOT SMALLER THAN NO 4.
3. INSTALL EQUIPMENT GROUNDING CONDUCTOR SIZED BASED ON NEC TABLE 250-122 USING THE FEEDER OVERCURRENT DEVICE SIZE.
4. INSTALL BONDING JUMPER WIRE THAT IS SIZED BASED ON NEC TABLE 250-66 OR 250.28(D)(1) USING THE SERVICE OR SEPARATELY-DERIVED SYSTEM PHASE PHASE CONDUCTOR SIZE.
5. CONNECT TO NEAREST METAL STRUCTURAL GROUNDING ELECTRODE OR COLD WATER PIPE GROUNDING ELECTRODE IN ACCORDANCE WITH ARTICLES 250.30(A) (8) AND 250.104(D)(1) OF THE 2014 N.E.C.
6. INSTALL SUPPLY SIDE BONDING JUMPER THAT IS SIZED BASED ON NEC TABLE 250.66 USING THE SEPARATELY DERIVED SYSTEM PHASE CONDUCTOR SIZE.

PARTIAL 480/277V GROUNDING SYSTEM DIAGRAM

NTS

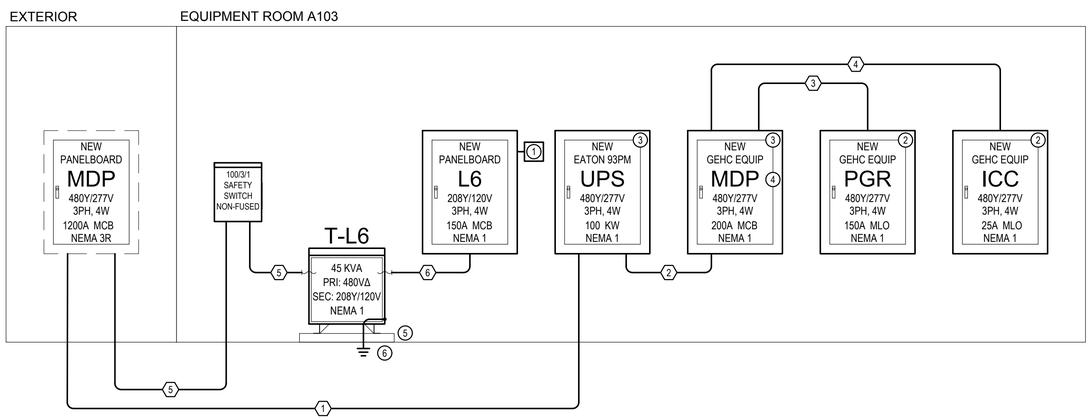

PARTIAL SINGLE LINE POWER RISER DIAGRAM

NTS

FEEDER SCHEDULE

DESIGNATION (#)	EQUIPMENT NAME	FED FROM	BREAKER RATING	BREAKER POLES	PARALLEL RUNS	CONDUIT	PH + N CONDUCTOR	PHASE & GROUNDED(N) CONDUCTOR	EQUIPMENT GROUND CONDUCTOR	SUPPLY SIDE BONDING CONDUCTOR	MATERIAL
1	MRI UPS	MDP	200	3	1	2"	4	3/0 AWG	6 AWG	N/A	CU
2	MRI MDP	MRI UPS	200	3	1	2"	4	3/0 AWG	6 AWG	N/A	CU
3	MRI PGR	MRI MDP	150	3	1	1-1/2"	4	1/0 AWG	6 AWG	N/A	CU
4	MRI ICC *	MRI MDP	25	3	1	3/4"	4	10 AWG	10 AWG	N/A	CU
5	T-L6	MDP	70	3	1	1"	3	4 AWG	8 AWG	N/A	CU
6	L6	T-L6	150	3	1	1-1/2"	4	1/0 AWG	N/A	6 AWG	CU

* MRI ICC CABLING TO BE PROVIDED BY GE HEALTHCARE

KEYNOTES

1. INSTALL SURGE SUPPRESSOR IN BREAKER POSITION NEAREST NEUTRAL BAR WITH 4#10, 1#10G IN 3/4"C. LEAD LENGTH SHALL NOT EXCEED UL 1449 4TH EDITION TEST OF 14".
2. EQUIPMENT SUPPLIED AND INSTALLED BY GE HEALTHCARE. REFER TO GE HEALTHCARE DRAWINGS FOR ADDITIONAL INFORMATION.
3. EQUIPMENT SUPPLIED BY GE HEALTHCARE AND INSTALLED BY ELECTRICAL CONTRACTOR. REFER TO GE HEALTHCARE DRAWINGS FOR ADDITIONAL INFORMATION.
4. NOTE THAT THE MRI MAIN DISCONNECT PANEL (MDP), AS NAMED BT GE HEALTHCARE, IS DISTINCTLY DIFFERENT FROM THE EXISTING MAIN DISTRIBUTION PANEL (MDP) DESPITE THE SIMILAR NAMING.
5. PROVIDE 4" CONCRETE PAD.
6. REFER TO GROUNDING DETAILS FOR ADDITIONAL INFORMATION.

HG Engineers
621 N Tyndall Pkwy, Suite C
Panama City, FL 32404
E-mail: office@hgengineers.com
Ph: 850.243.6723
FL Authorization No.00006680
Christopher A. Garick; FL. PE No.53924
Thomas A. Alexander; FL. PE No.73172
Daniel J. White; FL. PE No.73790
Caleb W. Leonard; FL. PE No.91782

24110
Job No.

DAG ARCHITECTS
DAG Architects AR0009694
455 Harrison Ave Suite I Panama City, FL 32401
850.387.1671
www.DAGarchitects.com

BID DOCUMENTS

HCA FLORIDA GULF COAST HOSPITAL
Outpatient Rehabilitation & Diagnostic Center
DIAGNOSTICS MRI ADDITION
2024 STATE STREET, PANAMA CITY, FL 32405

HCA Florida
Gulf Coast Hospital

REVISIONS:

No.	Description	Date
1	Addendum 1	04/22/2025

SINGLE LINE RISERS

PROJECT NUMBER	24107
DATED	03/28/2025

E-601

22017
CONSTRUCTION DWGS
2025-04-25

EXISTING POWER PANEL

MDP

SYSTEM 480/277V 3Φ 4W
RATING 1200A M.C.B. 35,000 AIC MINIMUM
ENCLOSURE NEMA 3R SURFACE MOUNT
OPTIONS BOLT ON BREAKERS; GE RELIAGEAR NEXT IN3212NN3H2

CKT #	SERVING	CKT BKR TRIP	CKT BKR POLE	CONNECTED LOAD (VA)		CKT BKR POLE	CKT BKR TRIP	SERVING	CKT #
	SPACE ONLY			- - -	- - -	3	400 A	PANEL H1	
	SPACE ONLY			- - -					
	SPACE ONLY			- - -	- - -	3	400 A	MAMO	
	SPACE ONLY			- - -	- - -			SPACE ONLY	
	SPACE ONLY			- - -	**122000**	**3**	**200 A**	**MRI UPS**	
					77568	**3**	**100 A**	**MRI CHILLER**	
	SPACE ONLY			- - -	- - -	3	125 A	SPARE	
					- - -	3	60 A	TSS	
	EXISTING UNKNOWN LOAD	20 A	2	- - -					
	SPARE	15 A	3	- - -	- - -	3	400 A	CTIPET SCAN	
	SPARE	15 A	3	- - -					
	PANEL L6 (VIA TRANSFORMER T-L6)	**70 A**	**3**	**35563**	- - -	3	400 A	PANEL H2	
	SPACE ONLY			- - -					
	SPACE ONLY			- - -					
	A/C	300 A	3	- - -	- - -	3	1200 A	MAIN BREAKER	

EXISTING DEMAND LOAD =	165000	VA **	/	831	=	198.6 A
NEW CONNECTED LOAD =	235131	VA	/	831	=	282.9 A
TOTAL LOAD =	400131	VA	/	831	=	481.5 A

NOTES:
* SHADED FONT INDICATES EXISTING BREAKERS/CIRCUITS; BOLD FONT INDICATES NEW BREAKERS/CIRCUITS TO BE PROVIDED AND INSTALLED IN EXISTING EMPTY SPACE.
** EXISTING DEMAND LOAD CALCULATED AT 125% OF PEAK VALUE OBTAINED FROM HISTORICAL UTILITY POWER BILLS.

*** SPECIAL NOTE ***
PROVIDE 'LSI' TRIP UNITS FOR BREAKERS GREATER THAN OR EQUAL TO 200A.

NEW POWER PANEL

L6

SYSTEM 208/120V 3Φ 4W
RATING 150A M.C.B. 10,000 AIC MINIMUM
ENCLOSURE NEMA 1 SURFACE MOUNT
OPTIONS BOLT ON BREAKERS

CKT #	SERVING	CKT BKR TRIP	CKT BKR POLE	CONNECTED LOAD (VA)		CKT BKR POLE	CKT BKR TRIP	SERVING	CKT #
1	LTG - MRI SUITE	20 A	1	702	528	1	20 A	EF-1	2
3	REC - CONTROL A101	20 A	1	720	864	1	20 A	EF-2	4
5	REC - CONTROL A101	20 A	1	720	1875	1	20 A	EWH-1	6
7	REC - CONTROL A101	20 A	1	540	1500	1	20 A	REC - CONTROL A101 - OPERATOR CONSOLE & INJECTOR CTRL	8
9	REC - MAGNET ROOM A102	20 A	1	360	600	1	20 A	REC - CONTROL A101 - REMOTE CONTROL PANEL	10
11	REC - EQUIP ROOM A103	20 A	1	720	- - -	1	20 A	SPARE	12
13	REC - VESTIBULE, EXTERIOR	20 A	1	720	800	1	20 A	REC - EQUIPMENT A103 - MAGNET MONITOR	14
15	REC - CORR A100, CHANGING A104, MECH A105, EXTERIOR	20 A	1	1080	1500	1	20 A	REC - EQUIPMENT A103 - INJECTOR POWER SUPPLY	16
17	SPARE	20 A	1	- - -	1600	1	20 A	RF FILTER POWER	18
19	SPARE	20 A	1	- - -	600	1	20 A	ACCESS CONTROL POWER SUPPLIES	20
21	SPARE	20 A	1	- - -	- - -	1	20 A	SPARE	22
23	SPARE	20 A	1	- - -	- - -	1	20 A	SPARE	24
25	SPACE ONLY	- - -	- - -	- - -	- - -	- - -	- - -	SPACE ONLY	26
27	SPACE ONLY	- - -	- - -	- - -	- - -	- - -	- - -	SPACE ONLY	28
29	SPACE ONLY	- - -	- - -	- - -	3064	2	25 A	MHP-1 & WM-1.1	30
31	SPACE ONLY	- - -	- - -	- - -					32
33	HP-1	30 A	2	2941	3064	2	25 A	MHP-2 & WM-2.1	34
35									36
37									38
39	HP-1	40 A	2	10865	- - -	3	30 A	SURGE PROTECTIVE DEVICE	40
41									42

TOTAL CONNECTED LOAD = 35563 VA / 360 = 98.8 A

NOTES:
*

MECHANICAL, PLUMBING, & MRI EQUIPMENT COORDINATION SCHEDULE

(VERIFY ALL EQUIPMENT CIRCUIT REQUIREMENTS WITH MANUFACTURERS SHOP DRAWINGS PRIOR TO ROUGH-IN)

EQUIPMENT DESIGNATION	DESCRIPTION	CFM	VOLT	Φ	ELECTRICAL LOAD: MOTOR(S) FLA: QTY	LARGEST	SUM OF REMAINING	ELECTRIC HEAT KW	OTHER VA	TOTAL CONNECTED VA	PROTECTION: MCA	MOCP	SPECIFIED: TRIP	POLE	CONDUCTOR / CONDUIT SIZE: SETS	CONDUCTORS: QTY.	SIZE	GND	CONDUIT	DISC.	REMARKS
CBOXX-100	CHILLER		480	3	6	35.00	58.3			77568	66.00	100	100	3	1	4	#3	#8	1-1/4"	100/3/3R	
AHU-1	AIR HANDLER UNIT	920	208	3	1	2.40		10		10865	37.74	40	40	2	1	4	#8	#10	3/4"	60/3/1	
HP-1	HEAT PUMP		208	1	2	13.50	0.64			2941	19.00	30	30	2	1	3	#10	#10	3/4"	30/2/3R	
MHP-1	MINI-SPLIT HEAT PUMP	1940	208	1	3	7.00	7.4			2995	19.00	25	25	2	1	3	#10	#10	3/4"	30/2/3R	OUTDOOR UNIT SUPPLIES POWER TO INDOOR UNIT
MHP-2	MINI-SPLIT HEAT PUMP	1940	208	1	3	7.00	7.4			2995	19.00	25	25	2	1	3	#10	#10	3/4"	30/2/3R	OUTDOOR UNIT SUPPLIES POWER TO INDOOR UNIT
WM-1.1	MINI-SPLIT WALL MOUNT UNIT	775	208	1	1	0.27				69	1.00	- - -	25	2	1	3	#10	#10	3/4"	2P TOGGLE	INDOOR UNIT RECEIVES POWER FROM OUTDOOR UNIT.
WM-2.1	MINI-SPLIT WALL MOUNT UNIT	775	208	1	1	0.27				69	1.00	- - -	25	2	1	3	#10	#10	3/4"	2P TOGGLE	INDOOR UNIT RECEIVES POWER FROM OUTDOOR UNIT.
EF-1	EXHAUST FAN (1/6 HP)	210	120	1	1	4.40				528	5.50	15	15	1	1	2	#12	#12	3/4"	1P TOGGLE	INTERLOCK WITH AHU-1 DAMPER.
EF-2	EXHAUST FAN (1/3 HP)	1500	120	1	1	7.20				864	9.00	20	20	1	1	2	#12	#12	3/4"	1P TOGGLE	INTERLOCK WITH SPECIFIED PUSH BUTTONS.
EWH-1	ELECTRIC WATER HEATER		120	1				1.5		1875	15.63	20	20	1	1	2	#12	#12	3/4"	30/21	
UPS	UNINTERRUPTABLE POWER SUPPLY		480	3								200	200	3	1	4	#3/0	#6	2"		EATON 93PM UPS; PROVIDED BY GE HEALTHCARE
MDP	MAIN DISCONNECT PANEL		480	3						129000		200	200	3	1	4	#3/0	#6	2"	INTEGRAL BRKR	EQUIPMENT PROVIDED BY GE HEALTHCARE
PGR	POWER CABINET		480	3								150	150	3	1	4	#1/0	#6	2"	MDP BREAKER	EQUIPMENT PROVIDED BY GE HEALTHCARE
ICC	INTEGRATED COOLING CABINET		480	3								25	25	3	1	4	#10	#10	3/4"	MDP BREAKER	EQUIPMENT PROVIDED BY GE HEALTHCARE

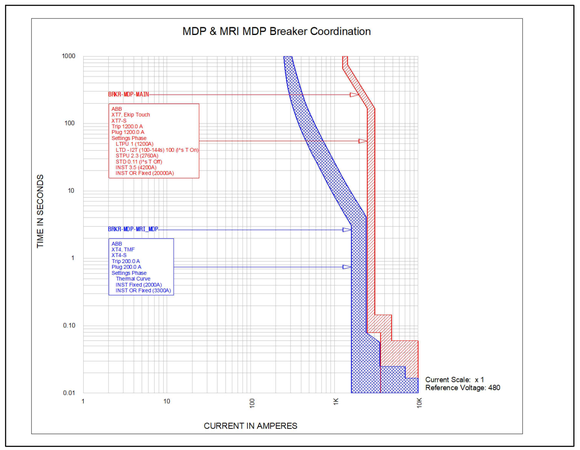

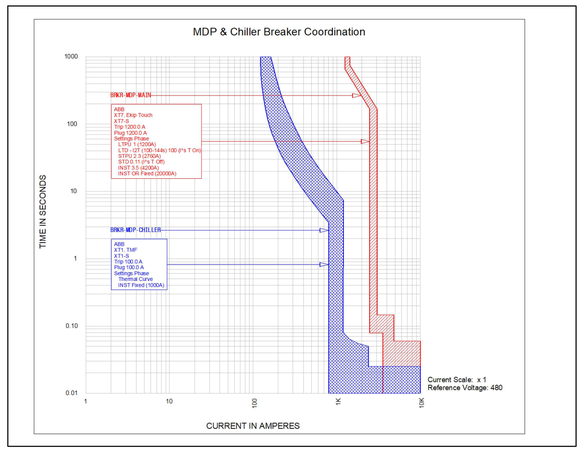

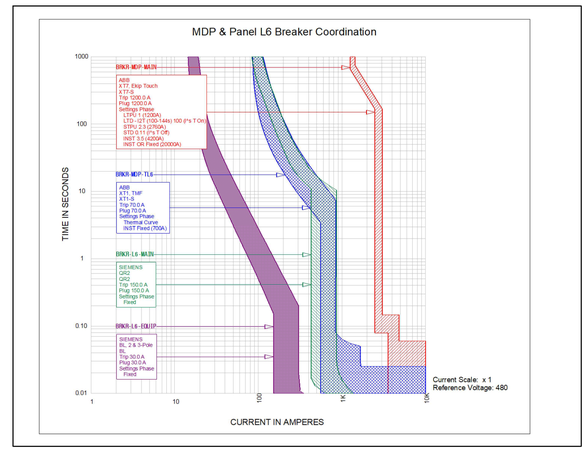

DAG ARCHITECTS
DAG Architects AR0009694
455 Harrison Ave Suite I Panama City, FL 32401
850.387.1671
www.DAGarchitects.com

BID DOCUMENTS

HCA FLORIDA GULF COAST HOSPITAL
Outpatient Rehabilitation & Diagnostic Center
DIAGNOSTICS MRI ADDITION
2024 STATE STREET, PANAMA CITY, FL 32405

HCA Florida
Gulf Coast Hospital

REVISIONS:

No.	Description	Date
1	Addendum 1	04/22/2025

ELECTRICAL SCHEDULES & TCC CURVES

PROJECT NUMBER	**24107**
DATED	03/28/2025

HG Engineers
621 N Tyndall Pkwy, Suite C
Panama City, FL 32404
E-mail: office@hgengineers.com
Ph: 850.243.6723
Fl. Authorization No.00006680
Christopher A. Garick; FL. PE No.53924
Thomas A. Alexander; FL. PE No.73172
Daniel J. White; FL. PE No.73790
Caleb W. Leonard; FL. PE No.91782

24110
Job No.

△1 E-602

22017
CONSTRUCTION DWGS
2025-04-25

TELECOMMUNICATIONS LEGEND

MISCELANIOUS SYSTEMS SYMBOLS			
FLR	CLG	WALL	
			COMMUNICATIONS OUTLET WITH COUPLERS AND COVERPLATE; INSTALL 3/4"C WITH CABLE UP INTO CEILING SPACE. SEE DETAILS FOR CONDUIT REQUIRED LOCATIONS. WALL MOUNT 18" AFF UNO.
			TELEPHONE OUTLET WITH COUPLERS AND COVERPLATE; INSTALL 3/4"C WITH CABLE UP INTO CEILING SPACE. SEE DETAILS FOR CONDUIT REQUIRED LOCATIONS.
			WIRELESS ACCESS POINT: CONTRACTOR TO PROVIDE CABLE IN 3/4" CONDUIT UNO. SEE DETAILS FOR CONDUIT REQUIRED LOCATIONS.
CR			EXISTING COMMUNICATIONS RACK; FLOOR MOUNT

COMMUNICATIONS OUTLET DESIGNATIONS	
###.## X	"X" INDICATES NUMBER OF PORTS. NO NUMBER INDICATES TWO(2). "###.##" INDICATES COUPLER NUMBERS.
+XX"	LETTERS +XX" ADJACENT TO SYMBOL INDICATES RECEPTACLE MOUNTING HEIGHT. WHERE NO HEIGHT IS INDICATED MOUNT 18" AFF TO C/L. +AC" = ABOVE COUNTER. +TV" = VERIFY HEIGHT OF TV WITH OWNER.

RACEWAY SYMBOLS			
FLR	CLG	WALL	
			JUNCTION BOX
			CONDUIT CAP
		UP	CONDUIT TURNED UP
		DN	CONDUIT TURNED DOWN
			RACEWAY INSTALLED CONCEALED IN WALLS/ABOVE CEILING
			RACEWAY INSTALLED CONCEALED BELOW GRADE/SLAB/FLOOR
			RACEWAY INSTALLED EXPOSED

GROUNDING SYMBOLS	
	GROUND ROD
	GROUNDING ELECTRODE/GROUNDING ELECTRODE SYSTEM

NOTE REFERENCES	
	TYPICAL/NEW WORK KEYNOTE REFERENCE
	DEMO KEYNOTE REFERENCE
	FEEDER NOTE REFERENCE
	REVISION REFERENCE

CABLING COLOR CODE	
BLUE	COMMUNICATIONS OUTLET TO COMM RACK
BLUE	COMM ROOM - COMMUNICATIONS OUTLET PATCH CORD
GRAY	WIRELESS ACCESS POINT TO COMM RACK
GRAY	COMM ROOM - WIRELESS ACCESS POINT PATCH CORD
RED	FIRE ALARM PANEL TO COMM RACK
BLACK	SECURITY PANEL TO COMM RACK
WHITE	LIGHTING CONTROL COMMUNICATIONS CABLING

CONDUIT ROUTING NOTES

A. LOCATION AND ROUTING OF CONDUIT IS APPROXIMATE AND DEPICTS DESIGN INTENT ONLY. THE CONTRACTOR IS SOLELY RESPONSIBLE FOR DETERMINING AND FIELD VERIFYING FINAL CONDUIT ROUTING. THE CONTRACTOR SHALL COORDINATE THE FINAL ROUTING OF CONDUITS TO AVOID CONFLICTS WITH OTHER TRADES WHILE MINIMIZING CHANGES IN DIRECTION AND OVERALL CONDUIT LENGTH.

B. SUPPORT CONDUIT FROM BUILDING STRUCTURE. DO NOT SUPPORT CONDUITS FROM OTHER SYSTEM COMPONENTS OR SUPPORTS.

C. TERMINATE ALL CONDUIT ENDS WITH THREADED PLASTIC INSULATING BUSHINGS. BUSHINGS MUST FIT TIGHTLY ON CONDUIT CONNECTOR THREADS. INSTALL BUSHINGS PRIOR TO PULLING CABLES.

D. IDENTIFY ALL CONDUITS AND PULLBOXES WITH BLUE PAINT. PAINT EACH CONDUIT COUPLING AND PULLBOX COVER.

COMMUNICATIONS LABELING NOTES

A. ALL COMMUNICATION OUTLET, PATCH PANELS, RACKS, AND CONNECTION BLOCKS SHALL BE LABELED USING THE FINAL ROOM NUMBERS OBTAINED FROM ARCHITECT.

B. ALL COMMUNICATIONS EQUIPMENT LABELS SHALL BE PRINTED USING FACTORY LABEL SHEETS AS PROVIDED BY MANUFACTURER.

OUTLET LOCATION NOTES

A. ALL COMMUNICATION OUTLET LOCATIONS ARE APPROXIMATE. THE CONTRACTOR SHALL COORDINATE THE EXACT LOCATION OF EACH OUTLET WITH THE ARCHITECT AND GENERAL CONTRACTOR PRIOR TO ROUGH-IN.

B. COMMUNICATION OUTLET LOCATIONS SHALL BE COORDINATED WITH WINDOWS, CASEWORK, DOOR SWINGS, COUNTER BACKSPLASHES AND ALL OTHER OBSTRUCTIONS.

TELECOM GENERAL NOTES

A. CONTRACTOR SHALL COORDINATE ALL WORK WITH OTHER TRADES PRIOR TO INSTALLATION. REFER TO ELECTRICAL, MECHANICAL AND PLUMBING DRAWINGS FOR EXACT SIZE AND LOCATION OF EQUIPMENT WHICH IS FURNISHED BY OTHERS.

B. DEVICES AND COVERPLATES COLOR SHALL BE SELECTED BY THE ARCHITECT FROM STANDARD COLORS FOR EACH SPACE.

C. ALL METAL PARTS OF COMMUNICATION RACKS AND EQUIPMENT SHALL BE GROUNDED THROUGH GROUND BUS. CONTRACTOR SHALL VERIFY THAT NO TWO PIECES OF EQUIPMENT IN ANY TELECOMMUNICATIONS SYSTEM HAVE A POTENTIAL DIFFERENCE GREATER THAN 500 MILLIVOLTS.

D. CONTRACTOR SHALL SUPPLY A MICARTA NAMEPLATE MECHANICALLY AFFIXED FOR EACH COMMUNICATIONS RACK, BACKBOARD AND TERMINAL CABINET. THE NAMEPLATE SHALL IDENTIFY THE SYSTEM..

E. ALL TURNS IN CONDUIT SHALL BE SWEPT CONDUIT OR MANUFACTURED ELBOWS. NO CONDULETS WILL BE ALLOWED.

F. ALL COMMUNICATIONS CABLING, WHETHER INSTALLED IN CONDUIT OR NOT, SHALL BE INSTALLED A MINIMUM OF 8" CLEAR FROM 120V ELECTRICAL, ALARM OR OTHER WIRING AND 12" CLEAR FROM MOTORS, LIGHT FIXTURES OR SOUND SYSTEM. A MINIMUM 6" CLEARANCE FOR THE SAME SHALL APPLY AT PERPENDICULAR CROSSOVER POINTS.

G. ALL JUNCTION BOXES, CONDUIT, HANGERS AND CABLING SHALL BE MOUNTED HIGH ENOUGH ABOVE THE SUSPENDED CEILING SO AS NOT TO INTERFERE WITH THE REMOVAL OR SERVICING OF CEILING TILES, LIGHT FIXTURES OR THE HVAC SYSTEM.

H. ALL EXPOSED CONDUITS, BOXES, STRAPS AND HANGERS IN THE CONTRACT AREA THAT ARE PART OF THE TELECOM SYSTEM SHALL BE PAINTED TO MATCH ADJACENT FINISH.

I. PROVIDE CONCRETE MARKER AT END OF ALL CONDUITS STUBBED OUT OF BUILDING FOR FUTURE USE. MARKER SHALL BE 6" DIA X 18" HIGH WITH 2" ABOVE FINISHED GRADE. INSCRIBE IN TOP OF MARKER "T" FOR TELECOM.

J. IN NO CASE SHALL ANY TELECOM CONDUIT HAVE MORE THAN TWO 90 DEGREE BENDS WITHOUT TERMINATING IN A PULLBOX. PULLBOXES SHALL NOT BE USED FOR A CHANGE OF DIRECTION.

K. VERIFY EXACT LOCATION OF ALL FLOOR OUTLETS WITH THE ARCHITECT PRIOR TO ROUGHING-IN.

L. ALL CABLES SHALL BE LABELED AT BOTH ENDS WITH THE COMMUNICATIONS OUTLET NUMBER AND THE PATCH PANEL OUTLET NUMBERS.

M. ALL TELECOMMUNICATION OUTLETS SHALL BE INSTALLED FLUSH IN WALLS OR FLOOR BOXES.

N. ALL PENETRATIONS OF FLOORS AND WALLS WHICH EXTEND TO THE UNDERSIDE OF THE FLOOR OR ROOF DECK SHALL BE FIRESTOPPED. FIRESTOPPING SHALL BE PROVIDED USING U.L. LISTED SYSTEMS WITH THE FIRE RATING EQUAL TO OR GREATER THAN THE FIRE RATING OF THE FLOOR OR WALL ASSEMBLY. INSTALL ALL FIRESTOP MATERIALS IN ACCORDANCE WITH THE MANUFACTURER'S INSTRUCTIONS. THE CONTRACTOR SHALL SUBMIT A DETAIL FOR EACH TYPE OF PENETRATIONS REQUIRED.

O. PROVIDE BUSHINGS ON ALL CONDUIT.

P. PROVIDE NO LESS THAN ONE SINGLE PORT DATA CABLE TO EACH OF THE FOLLOWING SPECIAL SERVICE CABINETS: A) FIRE ALARM SYSTEM, B) SECURITY SYSTEM, C) CCTV SYSTEM. COORDINATE LOCATIONS AND INTERFACE REQUIREMENTS WITH THE INSTALLER FOR EACH SPECIAL SYSTEM. CABLING SHALL BE HOME RUN IN CONDUIT TO COMM RACK.

Q. THE INSTALLING CONTRACTOR SHALL INSTALL THE FOLLOWING AMOUNTS OF COMMUNICATIONS CABLE SLACK: COMMUNICATIONS OUTLET - 1'6"; TELECOM CLOSET/ROOM - 20'-0".

ACCESS CONTROL LEGEND

SYSTEM SYMBOLS	
G	CARD READER, MOUNT 48" C/L TO FINISHED FLOOR / GRADE. COORDINATE FINAL LOCATION WITH OWNER / ARCHITECT PRIOR TO ROUGHING-IN.
ACSP	ACCESS CONTROL SYSTEM PANEL
DPS	DOOR POSITION SWITCH
EM	ELECTRIFIED LOCKSET
JB	JUNCTION BOX
MB	MORTAR BOX
PS	POWER SUPPLY
PT	POWER TRANSFER
RQE	REQUEST-TO-EXIT

CARD READER NOTES

CARD READER SHALL BE HSPD-12 COMPLIANCE, BOSCH B942 (PIV/KEYPAD), WHERE WALL-MOUNTED. INSTALL USING FACTORY MOUNTING PLATE PROVIDED BY MANUFACTURER.

PROVIDE SINGLE GANG DEEP WALL BOX FOR CARD READERS INSTALLED IN WALLS. PROVIDE MASONRY BOX WHERE MOUNTED IN BLOCK / BRICK. DO NOT PROVIDE AN OVERSIZED PLATE TO COVER UNFINISHED OPENINGS AROUND WALL BOX. ALL EXTERIOR CARD READER LOCATIONS SHALL BE WATERTIGHT.

DOOR POSITION SWITCH NOTE

DOOR POSITION SWITCHES SHALL BE NORMALLY OPEN. EACH SWITCH SHALL BE HELD IN THE CLOSED POSITION BY MAGNET WHEN DOOR IS CLOSED AND MAGNET IS WITHIN MANUFACTURER'S SPECIFIED GAP DISTANCE FROM SWITCH. THE SWITCH SHALL MOVE TO THE OPEN POSITION WHEN DOOR IS OPENED. OPEN CIRCUIT SHALL GENERATE AN ALARM STATE UNLESS A RQE IS SIGNALED.

SECURE DOOR OPERATION

PRESENTING VALID DOOR CREDENTIAL TO CARD READER SIGNALS ELECTRIC UNLOCKING OF THE ELECTRIFIED EXIT DEVICE OR THE ELECTRIFIED LOCKSET. THE DOOR POSITION SWITCH MONITORS THE STATUS OF EACH DOOR FOR DOOR HELD OPEN OR UNAUTHORIZED ENTRY. A REQUEST-TO-EXIT SWITCH INTERNAL TO EXIT DEVICE OR LOCKSET AND CONNECTED TO INTRUSION DETECTION SYSTEM IS ACTIVATED UPON EXITING FROM THE SECURE SIDE SIGNALING AN AUTHORIZED EXITING.

ACCESS CONTROL GENERAL NOTES

A. CONTRACTOR SHALL COORDINATE ALL WORK WITH OTHER TRADES PRIOR TO INSTALLATION. REFER TO ELECTRICAL, MECHANICAL AND PLUMBING DRAWINGS FOR EXACT SIZE AND LOCATION OF EQUIPMENT WHICH IS FURNISHED BY OTHERS.

B. ALL ACCESS CONTROL CABLING SHALL BE RUN CONTINUOUSLY IN CONDUIT. CONDUIT TYPES ARE AS DEFINED IN ELECTRICAL DRAWINGS & SPECIFICATIONS. MINIMUM SIZE IS 3/4" EXCEPT AT DOOR FOR CONNECTIONS WHERE 1/2" IS ALLOWED. ALL CONDUIT SHALL BE CONCEALED IF AT ALL POSSIBLE WHERE EXISTING WALLS DO NOT PROVIDE FOR IT. EXPOSED CONDUITS TO PUBLIC SHALL BE GRC.

C. ALL JUNCTION BOXES, CONDUIT, HANGERS AND CABLING SHALL BE MOUNTED HIGH ENOUGH ABOVE THE SUSPENDED CEILING SO AS NOT TO INTERFERE WITH THE REMOVAL OR SERVICING OF CEILING TILES, LIGHT FIXTURES OR THE HVAC SYSTEM. PAINT ACCESS CONTROL JUNCTION BOX COVERS AND CONDUIT COUPLERS WHITE FOR ENTIRE ACCESS CONTROL SYSTEM.

D. ALL EXPOSED CONDUITS, BOXES, STRAPS AND HANGERS IN THE CONTRACT AREA THAT ARE PART OF THE ACCESS CONTROL SYSTEM SHALL BE PAINTED TO MATCH ADJACENT FINISH.

E. ALL PENETRATIONS OF FLOORS AND WALLS WHICH EXTEND TO THE UNDERSIDE OF THE FLOOR OR ROOF DECK SHALL BE FIRESTOPPED. FIRESTOPPING SHALL BE PROVIDED USING U.L. LISTED SYSTEMS WITH THE FIRE RATING EQUAL TO OR GREATER THAN THE FIRE RATING OF THE FLOOR OR WALL ASSEMBLY. INSTALL ALL FIRESTOP MATERIALS IN ACCORDANCE WITH THE MANUFACTURER'S INSTRUCTIONS. THE CONTRACTOR SHALL SUBMIT A DETAIL FOR EACH TYPE OF PENETRATIONS REQUIRED.

F. PROVIDE BUSHINGS ON ALL CONDUIT ENDS.

G. REFER TO DOOR HARDWARE SPECIFICATION AND DRAWINGS TO COORDINATE DOOR HARDWARE TYPES. POWER SUPPLIES SERVING SECURE DOORS WITH EXIT DEVICES SHALL BE PROVIDED AS PART OF THE DOOR HARDWARE PACKAGE AND SHALL BE THE SAME MANUFACTURER AS THE EXIT DEVICE.

H. ALL DOORS SHALL HAVE MECHANICAL FREE EGRESS FROM SECURE SIDE TO UNSECURE SIDE UNLESS NOTED OTHERWISE BY DOOR HARDWARE SPECIFICATIONS.

I. ALL DOORS SHALL FAIL SECURE UPON LOSS OF POWER TO LOCKING DEVICE UNLESS NOTED OTHERWISE BY DOOR HARDWARE SPECIFICATIONS.

J. ALL SECURE DOORS SHALL HAVE REQUEST TO EXIT INTEGRAL TO THE DOOR HARDWARE SUCH THAT EGRESS THROUGH A SECURE DOOR FROM THE SECURE SIDE SHALL NOT GENERATE AN INTRUSION ALARM, UNLESS NOTED OTHERWISE BY DOOR HARDWARE SPECIFICATION.

K. PROVIDE WEATHERPROOF CARD READERS AND PUSH TO ENTER DEVICES AND CONSTRUCTION TECHNIQUES AT ALL EXTERIOR LOCATIONS.

L. CARD READER LOCATIONS ARE APPROXIMATE. EXACT LOCATION WITHIN VICINITY OF THE DOOR SERVED TO BE DETERMINED BY OWNER AND ARCHITECT PRIOR TO ROUGHING-IN AT NO COST TO OWNER.

M. FINAL DOOR NUMBERS SHALL BE BASIS FOR SYSTEM LABELING AND PROGRAMMING. COORDINATE FINAL NUMBERS WITH OWNER AND ARCHITECT PRIOR TO PROGRAMMING AND LABELING.

N. AN INTRUSION ALARM SYSTEM SHALL BE SET UP AS AN EXTENSION OF AND FULLY INTEGRATED WITH THE ACCESS CONTROL SYSTEM.

O. ALL CONDUIT AT SECURE AND MONITORED DOORS SHALL BE MOUNTED ON THE SECURE SIDE.

Sheet List Table

ABBREVIATIONS	
ACS	ACCESS CONTROL SYSTEM
ACSC	ACCESS CONTROL SYSTEM CONTRACTOR
ADA	AMERICANS WITH DISABILITIES ACT
AFF	ABOVE FINISHED FLOOR
AFG	ABOVE FINISHED GRADE
AHJ	AUTHORITY HAVING JURISDICTION
AWG	AMERICAN WIRE GAUGE
BLDG	BUILDING
CAT 6	CATEGORY 6
CAT 6A	CATEGORY 6 AUGMENTED
CO	COMMUNICATIONS OUTLET
CP	CONSOLIDATION POINT
CFCI	CONTRACTOR FURNISHED, CONTRACTOR INSTALLED
CFOI	CONTRACTOR FURNISHED, OWNER INSTALLED
CLG	CEILING
DN	DOWN
DWG	DRAWING
EC	ELECTRICAL CONTRACTOR
ELEC	ELECTRICAL
FA	FIRE ALARM
FLR	FLOOR
FO	FIBER OPTIC
GC	GENERAL CONTRACTOR
GND	GROUNDED
HH	HANDHOLE
HVAC	HEATING, VENTILATING AND AIR CONDITIONING
JB	JUNCTION BOX
LAN	LOCAL AREA NETWORK
um	MICRON / MICROMETER
MTD	MOUNTED
MTG	MOUNTING
NEC	NATIONAL ELECTRICAL CODE
NIC	NOT IN CONTRACT
N/A	NOT APPLICABLE
OFCI	OWNER FURNISHED, CONTRACTOR INSTALLED
OFOI	OWNER FURNISHED, OWNER INSTALLED
PR	PAIR
PP	PATCH PANEL
RMU	RACK MOUNT UNIT
SM	SINGLE MODE
STR	STRANDS
UPS	UNINTERRUPTIBLE POWER SUPPLY
UTP	UNSHIELDED TWISTED PAIR
UNO	UNLESS NOTED OTHERWISE
WAP	WIRELESS ACCESS POINT

APPLICABLE CODE REFERENCES
FLORIDA BUILDING CODE, 8TH EDITION 2023
NATIONAL ELECTRIC CODE (NEC) NFPA 70 2020
NFPA 72, 2019 EDITION, NATIONAL FIRE ALARM AND SIGNALING CODE.
NFPA 1, THE FIRE CODE FLORIDA 2021 EDITION
NFPA 101, THE LIFE SAFETY CODE®, FLORIDA 2021 EDITION
FLORIDA FIRE PREVENTION CODE (FFPC) 2023
GUIDELINES FOR THE DESIGN AND CONSTRUCTION OF HOSPITALS, 2022 EDITION.

HG Engineers
621 N Tyndall Pkwy, Suite C
Panama City, FL 32404
E-mail: office@hgengineers.com
Ph: 850.243.6723
Fl. Authorization No.00006680
Christopher A. Garick; FL. PE No.53924
Thomas A. Alexander; FL. PE No.73172
Daniel J. White; FL. PE No.73790
Caleb W. Leonard; FL. PE No.91782

24110
Job No.

DAG ARCHITECTS
DAG Architects AR0009694
455 Harrison Ave Suite I Panama City, FL 32401
850.387.1671
www.DAGarchitects.com

BID DOCUMENTS

HCA FLORIDA GULF COAST HOSPITAL
Outpatient Rehabilitation & Diagnostic Center
DIAGNOSTICS MRI
ADDITION
2024 STATE STREET, PANAMA CITY, FL 32405

HCA Florida
Gulf Coast Hospital

REVISIONS:

No.	Description	Date
1	Addendum 1	04/22/2025

LEGEND AND NOTES

PROJECT NUMBER	24107
DATED	03/28/2025

T-001

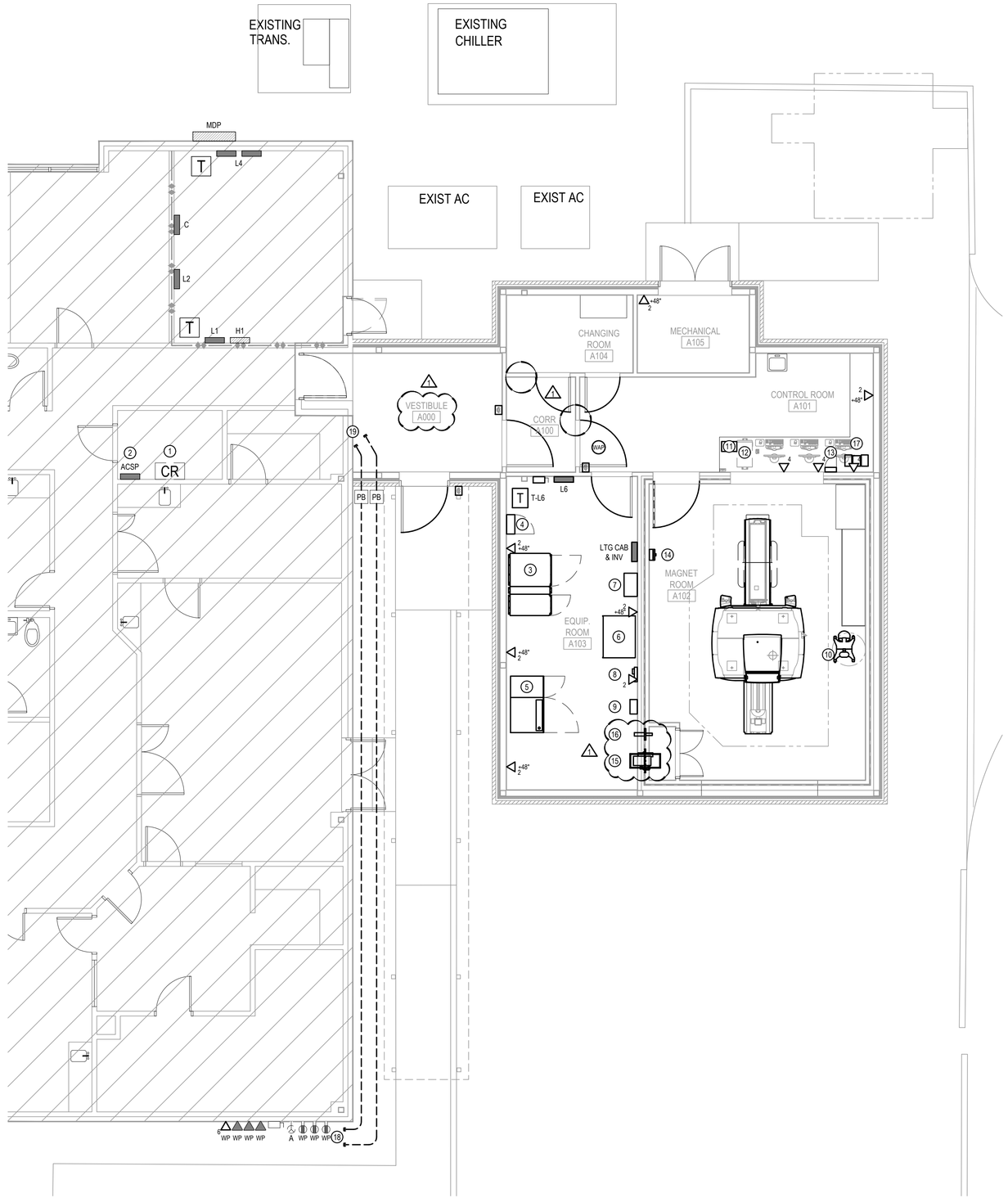

NORTH

GENERAL NOTES

1. COORDINATE ALL INSTALLATIONS WITHIN MAGNET ROOM WITH RF SHIELDING INSTALLER. ENSURE NECESSARY FILTERS AND NON-FERROUS CONSTRUCTION IS UTILIZED. PROVIDE LEAD SHEATHING FOR ANY TELECOM INSTALLATION WITHIN RF SHIELDED WALLS AND ELSEWHERE DEEMED NECESSARY.
2. COORDINATE ALL INSTALLATION WITH GE HEALTHCARE DRAWINGS TO INCLUDE ANY ADDITIONAL REQUIREMENTS OUTLINED IN THOSE DOCUMENTS THAT HAVE OTHERWISE NOT BEEN CAPTURED WITHIN THESE SHEETS.
3. UNLESS OTHERWISE NOTED, THE EC SHALL PROVIDE ALL NECESSARY CONDUIT AND/OR CABLE TRAY BETWEEN PIECES OF GE HEALTHCARE EQUIPMENT REGARDLESS OF THE EQUIPMENT INSTALLER. THE EC SHALL ALSO PROVIDE THE NECESSARY POWER AND/OR CONTROL CABLING WHERE INDICATED BY GE HEALTHCARE.

KEYNOTES

1. EXISTING TELECOMMUNICATIONS RACK. ROUTE ALL DATA RUNS BACK TO THIS LOCATION. COORDINATE LANDINGS WITH HOSPITAL STAFF.
2. EXISTING LENEL S2 ACCESS CONTROL SYSTEMS PANEL. FIELD VERIFY EXACT MODEL AND PROVIDE DEVICES COMPATIBLE WITH EXISTING SYSTEM.
3. EATON 93PM UNINTERRUPTIBLE POWER SUPPLY (UPS) SUPPLIED BY GEHC AND INSTALLED BY EC.
4. MRI MAIN DISCONNECT PANEL (MDP) SUPPLIED BY GEHC AND INSTALLED BY EC.
5. POWER, GRADIENT, RF CABINET (PGR) SUPPLIED AND INSTALLED BY GEHC.
6. INTEGRATED COOLING CABINET (ICC) SUPPLIED AND INSTALLED BY GEHC.
7. CHILLER INTERFACE PANEL (CIP) SUPPLIED BY GEHC AND INSTALLED BY MECHANICAL CONTRACTOR. NO TELECOM CONNECTION REQUIRED.
8. MAGNET MONITOR (MON) SUPPLIED AND INSTALLED BY GEHC. COORDINATE DATA OUTLET MOUNTING HEIGHT WITH MANUFACTURER RECOMMENDATION.
9. INJECTOR POWER SUPPLY (IPS) SUPPLIED BY BAYER AND INSTALLED BY EC.
10. INJECTOR HEAD ON PEDESTAL (IHP) SUPPLIED AND INSTALLED BY BAYER. PROVIDE FIBER INTERCONNECTION WITH INJECTOR CONTROLLER, ROUTED THROUGH BAYER PENETRATION PANEL AND FIBER OPTIC QUICK DISCONNECT PANEL. COORDINATE WITH BAYER FOR EXACT INSTALLATION LOCATION.
11. INJECTOR CONTROLLER (IC) SUPPLIED AND INSTALLED BY BAYER. PROVIDE FIBER INTERCONNECTION WITH INJECTOR HEAD OF PEDESATL, ROUTED THROUGH BAYER PENETRATION PANEL AND FIBER OPTIC QUICK DISCONNECT PANEL.
12. GLOBAL OPERATOR CONSOLE (GOC) SUPPLIED AND INSTALLED BY GEHC.
13. REMOTE CONTROL PANEL (RCP) SUPPLIED BY GEHC AND INSTALLED BY EC.
14. MAGNET RUNDOWN UNIT (MRU) SUPPLIED AND INSTALLED BY GEHC.
15. PENETRATION PANEL (PP) SUPPLIED AND INSTALLED BY GEHC.
16. PENETRATION PANEL (BPP) SUPPLIED AND INSTALLED BY BAYER. COORDINATE WITH BAYER FOR EXACT INSTALLATION LOCATION.
17. MUSIC SYSTEM (MS) SUPPLIED AND INSTALLED BY GEHC.
18. RELOCATE EXISTING MOBILE MRI DATA AND PHONE OUTLETS FOR TO THIS LOCATION. PROVIDE NEW DEVICES AS SHOWN. ALL DEVICES SHALL BE MOUNTED AT APPROXIMATELY THE SAME HEIGHT AS THEY PREVIOUSLY WERE.
19. APPROXIMATE LOCATION TO INTERCEPT EXISTING CONDUITS TO MOBILE MRI RECEPTACLE AND ASSOCIATED DEVICES. EC TO PROVIDE ONE PULLBOX FOR POWER AND ANOTHER FOR DATA. EXTEND TO NEW LOCATION AS SHOWN. EC TO FIELD VERIFY EXISTING CONDITIONS TO DETERMINE TOTAL NUMBER OF CONDUITS, CIRCUITS, AND SIZE OR WIRE.

DAG ARCHITECTS
DAG Architects AR0009694
455 Harrison Ave Suite I Panama City, FL 32401
850.387.1671
www.DAGarchitects.com

BID DOCUMENTS

HCA FLORIDA GULF COAST HOSPITAL
Outpatient Rehabilitation & Diagnostic Center
DIAGNOSTICS MRI ADDITION
2024 STATE STREET, PANAMA CITY, FL 32405

HCA Florida
Gulf Coast Hospital

REVISIONS:

No.	Description	Date
1	Addendum 1	04/22/2025

FLOOR PLAN - TELECOM

PROJECT NUMBER	24107
DATED	03/28/2025

T-111

T-111 FLOOR PLAN - TELECOM

SCALE: 3/16" = 1'-0"

HG ENGINEERS
HG Engineers
621 N Tyndall Pkwy, Suite C
Panama City, FL 32404
E-mail: office@hgengineers.com
Ph: 850.243.6723
FL Authorization No.00006680
Christopher A. Garick; FL. PE No.53924
Thomas A. Alexander; FL. PE No.73172
Daniel J. White; FL. PE No.73790
Caleb W. Leonard; FL. PE No.91782

24110
Job No.

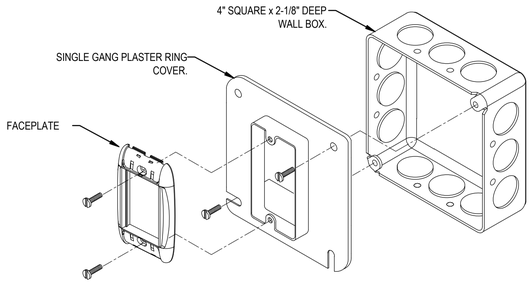

TYPICAL FLUSH MOUNT COMMUNICATIONS OUTLET DETAIL

NTS

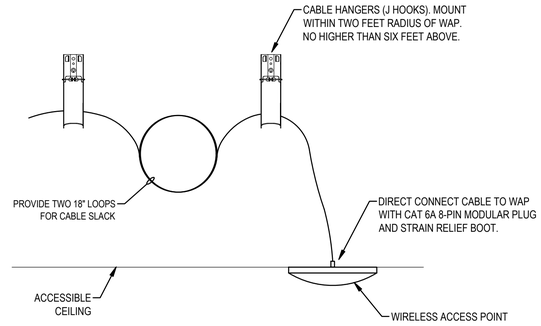

WIRELESS ACCESS POINT MOUNTING DETAIL

NOT TO SCALE

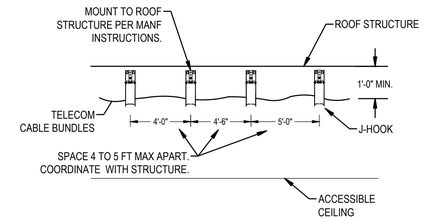

CABLE ROUTING NOTES

1. ROUTE PERPENDICULAR & PARALLEL TO BUILDING LINES.
2. BUNDLE CABLES WITH PANDUIT PAN-TY PRT4S-C WITH RELEASABLE LOOP AT EACH HANGER.
3. HANGERS FOR CABLES SHALL BE J-HOOKS EQUAL TO ERICO CADDY CAT 32 HP. COLOR SHALL BE BLUE.
4. MAXIMUM NUMBER OF CABLES OR BUNDLE SIZE IS 25 FOR CAT 6A AND 40 FOR CAT 5 OR 6.
5. EACH CATEGORY OF CABLE SHALL BE BUNDLED TOGETHER WITH LIKE CABLE, SEPARATE FROM OTHER CATEGORIES OF CABLING. I.E. DON'T BUNDLE CAT 6 WITH CAT 6A.

CABLE ROUTING DETAIL

NOT TO SCALE

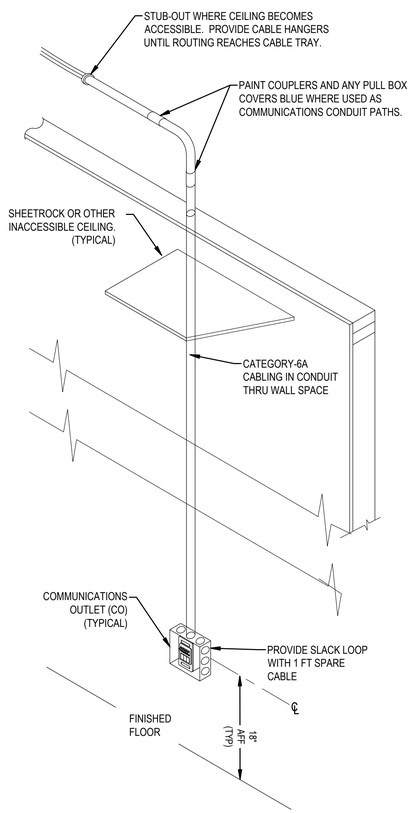

COMMUNICATIONS OUTLET INSTALLATION DETAIL AT INACCESSIBLE CEILING LOCATIONS

NTS

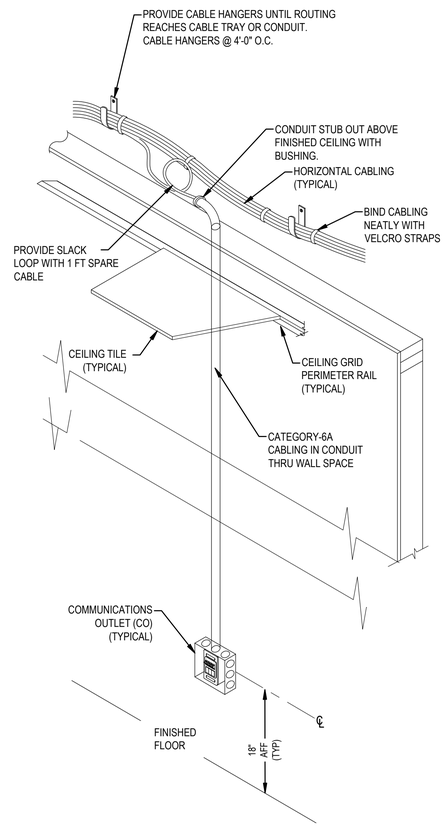

COMMUNICATIONS OUTLET INSTALLATION DETAIL AT ACCESSIBLE CEILING LOCATIONS

NTS

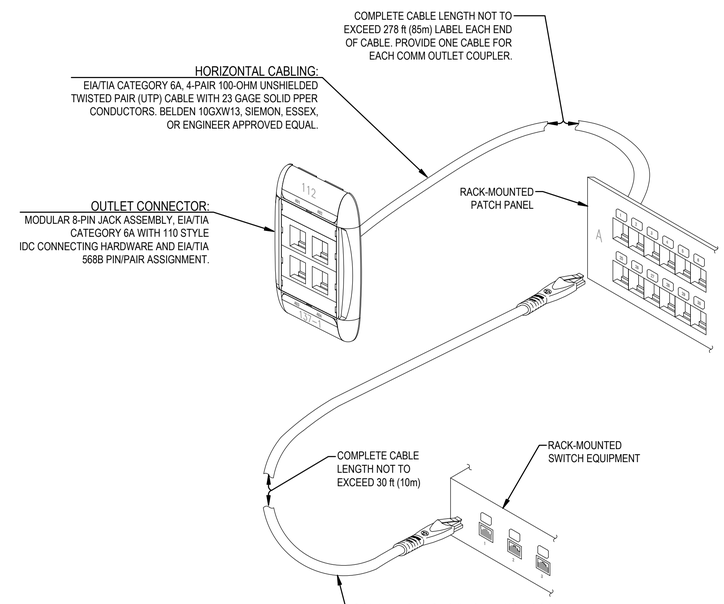

COMMUNICATIONS CABLING DETAIL

NOT TO SCALE

HG Engineers
621 N Tyndall Pkwy, Suite C
Panama City, FL 32404
E-mail: office@hgengineers.com
Ph: 850.243.6723
Fl. Authorization No.00006680
Christopher A. Garick; FL. PE No.53924
Thomas A. Alexander; FL. PE No.73172
Daniel J. White; FL. PE No.73790
Caleb W. Leonard; FL. PE No.91782

24110
Job No.

DAG ARCHITECTS
DAG Architects AR0009694
455 Harrison Ave Suite I Panama City, FL 32401
850.387.1671
www.DAGarchitects.com

BID DOCUMENTS

HCA FLORIDA GULF COAST HOSPITAL
Outpatient Rehabilitation & Diagnostic Center
DIAGNOSTICS MRI
ADDITION
2024 STATE STREET, PANAMA CITY, FL 32405

HCA Florida
Gulf Coast Hospital

REVISIONS:

No.	Description	Date
1	Addendum 1	04/22/2025

TELECOM DETAILS

PROJECT NUMBER	24107
DATED	03/28/2025

△1 T-501

22017
CONSTRUCTION DWGS
2025-04-25

DATA SYSTEM NOTES:

1. HORIZONTAL WIRING CABLES. CATEGORY 6A, FOUR-PAIR 100-OHM UNSHIELDED TWISTED PAIR (UTP) CABLE WITH 24 AWG SOLID PAIR CONDUCTORS. MAXIMUM LENGTH 90 METERS (295'). CABLE COLOR SHALL BE BLUE FOR DATA AND GRAY FOR ACCESS POINTS. TERMINATE CABLES AT PATCH PANEL.
2. OFOI ACCESS POINT.

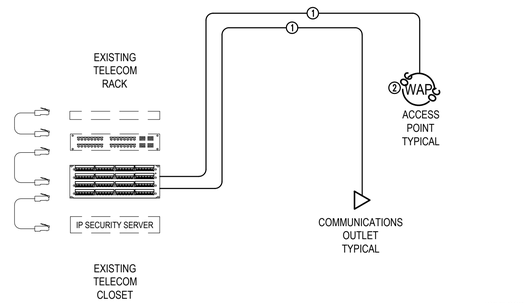

TELCOM CABLING RISER DIAGRAM

NOT TO SCALE

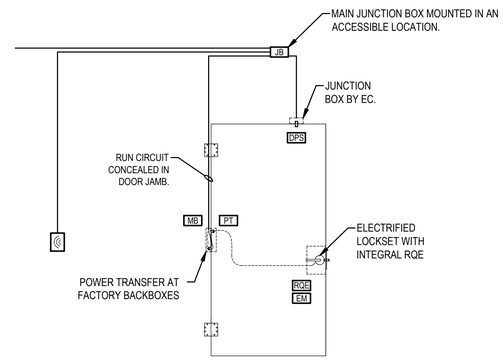

SECURE SINGLE DOOR WITH LOCKSET

NOT TO SCALE

EXISTING PATCH PANEL		Number of Ports:	N/A	Coupler Style:	SINGLE
		EIA/TIA Category Rating:	6a	Mounting:	N/A
		Options:	BLUE - DATA; GRAY - WAP; GRN - CAM; Y - CA		
Location Served		Number of Terminations	Room No. Designation	Physical Port Numbers	
Room No.	Room Name				
A101	CONTROL ROOM	14	A101 .1 - 14	1 - 14	
A102	EQUIPMENT ROOM	10	A102 .1 - 10	15 - 24	
A105	MECHANICAL ROOM	2	A105 .1 - 2	25 - 26	
Patch Panel Addition Totals:		26			

OUTLET DETAIL NOTES:

1. CATEGORY 6A, 2-PORT ANGLED DATA COUPLER, EQUAL TO BELDEN AX102413 INSERT WITH (2) 8P CAT 6A MODULAR JACKS, EQUAL TO BELDEN REVCONNECT RV6MJKUEW, COLOR ELECTRIC WHITE
2. CATEGORY 6A, 2-PORT ANGLED DATA COUPLER, BELDEN AX102413 INSERT WITH (1) 8P CAT 6A MODULAR JACKS, BELDEN REVCONNECT RV6MJKUEW AND ONE BLANK COVER, COLOR ELECTRIC WHITE
3. FACEPLATE EQUAL TO BELDEN AX101747. COLOR ELECTRIC WHITE ELSEWHERE, PROVIDE (1) BELDEN AX101759 FILLER AND (1) BELDEN AX1011763 FILLER.

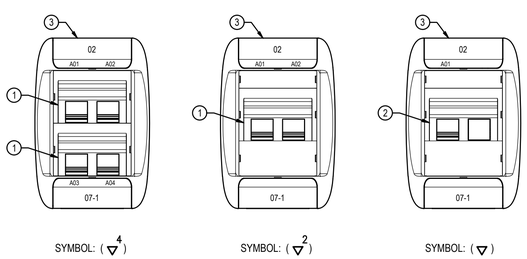

OUTLET CONFIGURATION DETAIL

NOT TO SCALE

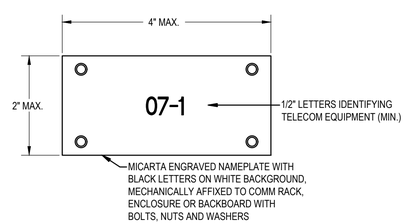

TYPICAL TELECOM EQUIPMENT NAMEPLATE

NOT TO SCALE

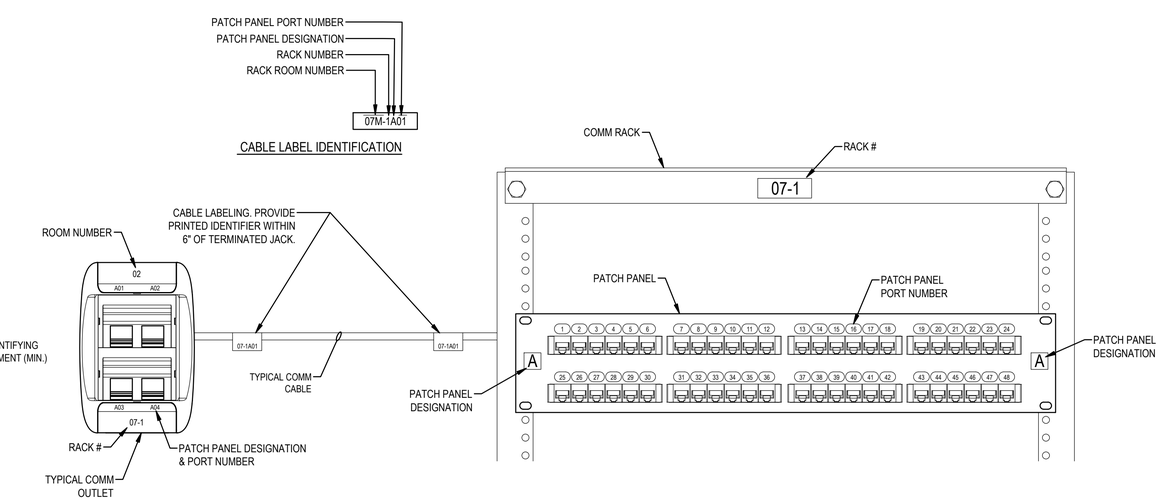

COMM OUTLET TO PATCH PANEL LABELING NOMENCLATURE

NOT TO SCALE

DAG ARCHITECTS
DAG Architects AR0009694
455 Harrison Ave Suite I Panama City, FL 32401
850.387.1671
www.DAGarchitects.com

BID DOCUMENTS

HCA FLORIDA GULF COAST HOSPITAL
Outpatient Rehabilitation & Diagnostic Center
DIAGNOSTICS MRI ADDITION
2024 STATE STREET, PANAMA CITY, FL 32405

HCA Florida
Gulf Coast Hospital

REVISIONS:

No.	Description	Date
1	Addendum 1	04/22/2025

TELECOM DETAILS

PROJECT NUMBER	24107
DATED	03/28/2025

HG ENGINEERS
HG Engineers
621 N Tyndall Pkwy, Suite C
Panama City, FL 32404
E-mail: office@hgengineers.com
Ph: 850.243.6723
FL Authorization No.00006680
Christopher A. Garick; FL. PE No.53924
Thomas A. Alexander; FL. PE No.73172
Daniel J. White; FL. PE No.73790
Caleb W. Leonard; FL. PE No.91782

24110
Job No.

T-502